ECO-TOP POWER

electric motors
SIMOTOP® GROUP

GENERAL CATALOGUE
english

rev. 24

electric motors

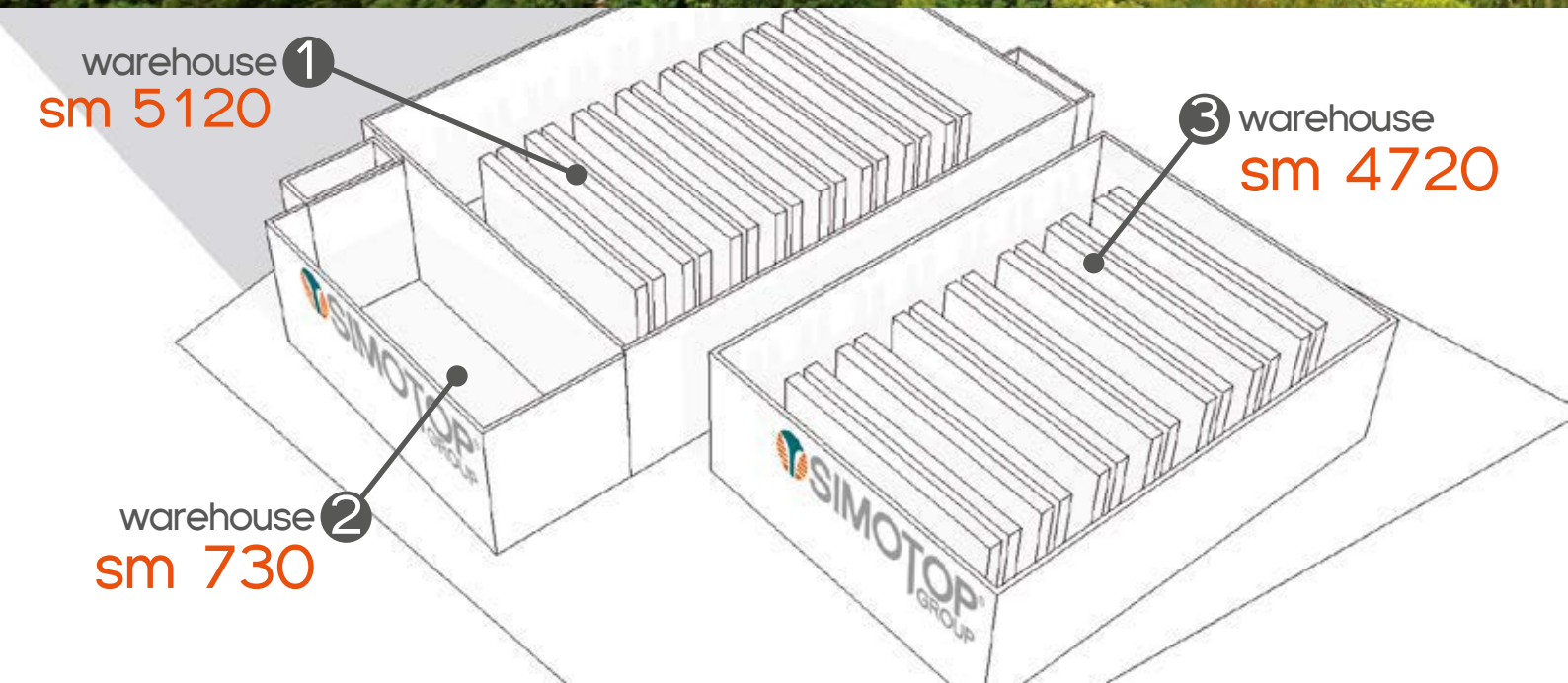

THE LARGEST "JUST IN TIME" STOCK IN EUROPE

A GREAT "VALUE CREATING" COMPANY

SIMOTOP® GROUP

ECO-TOP POWER

electric motors
SIMOTOP® GROUP

The Company

A SKILLED AND PROFESSIONAL INTERNATIONAL TEAM AT DISPOSAL OF CUSTOMERS

Two of the most important international companies, Shanghai Top Motor Corporation Ltd and Simo Import & Export Corporation Ltd wanted to satisfy the demands of the European Market, offering top quality products as well as a skilled professional team.

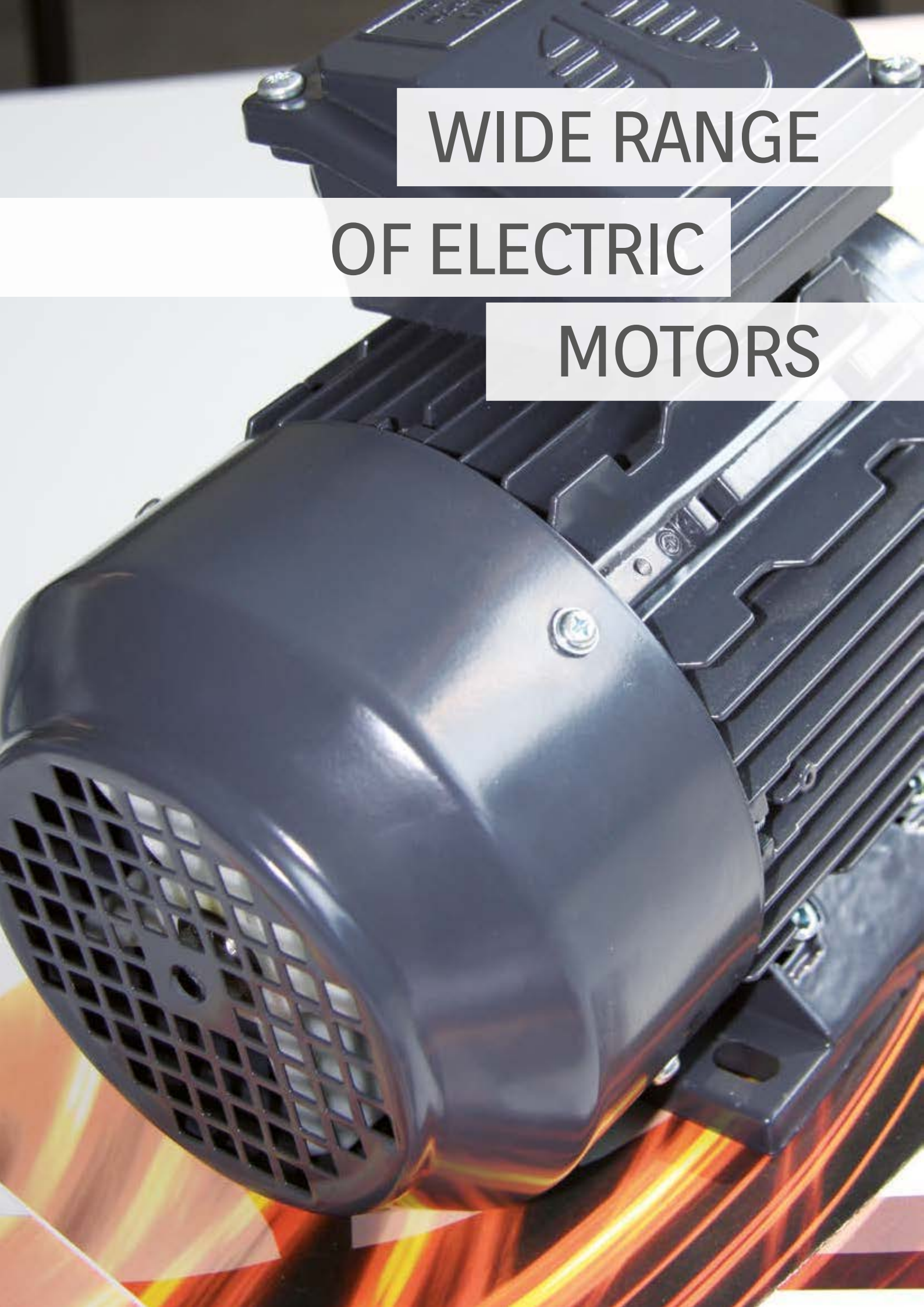

WIDE RANGE OF ELECTRIC MOTORS

electric motors SIMOTOP® GROUP

Index

01. General features	p.08
02. Standards	p.09
03. Mounting and positions	p.10
04. Ingress protection	p.11
05. General costruction features	p.11
06. Cooling	p.12
07. Bearings	p.13
08. Terminal box	p.14
09. Connection	p.15
10. Plate	p.16
11. Insulation, winding	p.17
12. Ratings and technical data	p.17
13. Supply voltage	p.17
14. Voltage and frequency variations	p.18
15. Operation at 60Hz frequency	p.18
16. Deratings	p.19
17. Services	p.20
18. Overloads	p.22
19. Starting	p.22
20. Balancing and Vibration grades	p.22
21. Noise	p.23
22. Thermal Protections	p.24
23. Anticondensation heaters	p.25
24. Inverter Supply	p.26
25. Maximum speed	p.28
26. Auxiliary Fans	p.29
27. Permissible load on the bearings	p.36
28. Maximum permissible radial and axial loads	p.37

ELECTRICAL AND MECHANICAL DATA MS SERIES	P.44
29. Three-Phase Asynchronous single speed motors	p.46
30. Three-Phase Asynchronous double speed motors	p.52
31. Overall and Installation dimension	p.54
32. Exploded view drawings and spare parts list	p.56
ELECTRICAL AND MECHANICAL DATA MYT SERIES	P.58
33. Single Phase Asyncronous Motors with high starting torque	p.60
34. Overall and Installation dimensions	p.62
ELECTRICAL AND MECHANICAL DATA TA “ECOL” SERIES	P.64
35. Three-Phase Asynchronous single speed motors	p.66
36. Weight - TA IE1	p.74
36. Weight - TA IE2	p.76
36. Weight - TA IE3	p.78
36. Weight - TA IE4	p.80
37. Overall and Installation dimensions	p.82
38. Exploded view drawings and spare parts list	p.84
ELECTRICAL AND MECHANICAL DATA TC “ECOL” SERIES	p.86
39. Three-Phase Asynchronous single speed motors	p.88
40. Weight - TA IE1	p.96
40. Weight - TA IE2	p.98
40. Weight - TA IE3	p.100
40. Weight - TA IE4	p.102
41. Overall and Installation dimensions	p.104
42. Exploded view drawings and spare parts list	p.106
43. Certificates	p.108
44. General conditions of sale	p.110
45. Network	p.112

01. GENERAL FEATURES

High efficiency motors

The Techtop motors are designed in accordance to the new european standard for high efficiency.
MS series, is designed and manufactured in accordance to the parameters of the new european classification standard for high efficiency IE1, IE2.
TA and TC series, are designed and manufactured in accordance to the parameters of the new european classification standard for high efficiency IE1, IE2, IE3, IE4.
The motors are totally enclosed, fan cooled, with squirrel cage rotor.
MS and TA series, from frame 56 to frame 200, are provided with aluminium housing.
TC series, from frame 132 to frame 560, is provided with cast iron housing.
IEC 60034-30 standard defines three IE (International Efficiency) efficiency classes of single speed three-phase cage induction motors; 50Hz and 60Hz; 2-4-6 poles; rated voltage up to 1000V; duty type S1 or S3 with a rated cyclic duration factor of 80% or higher operating direct on line.

- IE1 standard efficiency
- IE2 high efficiency from 0,75 to 375 kW, obligatory in Europe from 16.07.2012
- IE3 premium efficiency from 7,5 to 375 kW, obligatory in Europe from 01.01.2015 and from 0,75 to 375 kW obligatory in Europe from 01.01.2017

RATED POWER (kW)	STANDARD EFFICIENCY (IE1) STANDARD POLES			STANDARD EFFICIENCY (IE2) HIGH POLES			STANDARD EFFICIENCY (IE3) PREMIUM POLES			STANDARD EFFICIENCY (IE4) SUPER PREMIUM POLES		
	2	4	6	2	4	6	2	4	6	2	4	6
0,75	72,1	72,1	70,0	77,4	79,6	75,9	80,7	82,5	78,9	83,5	85,7	82,7
1,1	75,0	75,0	72,9	79,6	81,4	78,1	82,7	84,1	81,0	85,2	87,2	84,5
1,5	77,2	77,2	75,2	81,3	82,8	79,8	84,2	85,3	82,5	86,5	88,2	85,9
2,2	79,7	79,7	77,7	83,2	84,3	81,8	85,9	86,7	84,3	88,0	89,5	87,4
3	81,5	81,5	79,7	84,6	85,5	83,3	87,1	87,7	85,6	89,2	90,4	88,6
4	83,1	83,1	81,4	85,8	86,6	84,6	88,1	88,6	86,8	90,0	92,2	89,5
5,5	84,7	84,7	83,1	87,0	87,7	86,0	89,2	89,6	88,0	90,9	92,9	90,5
7,5	86,0	86,0	84,7	88,1	88,7	87,2	90,1	90,4	89,1	91,7	92,6	91,3
11	87,6	87,6	86,4	89,4	89,8	88,7	91,2	91,4	90,3	92,6	93,3	92,3
15	88,7	88,7	87,7	90,3	90,6	89,7	91,9	92,1	91,2	93,3	93,9	92,9
18,5	89,3	89,3	88,6	90,9	91,2	90,4	92,4	92,6	91,7	93,7	94,2	93,4
22	89,9	89,9	89,2	91,3	91,6	90,9	92,7	93,0	92,2	94,0	94,5	93,7
30	90,7	90,7	90,2	92,0	92,3	91,7	93,3	93,6	92,9	94,5	94,9	94,2
37	91,2	91,2	90,8	92,5	92,7	92,2	93,7	93,9	93,3	94,8	95,2	94,5
45	91,7	91,7	91,4	92,9	93,1	92,7	94,0	94,2	93,7	95,0	95,4	94,8
55	92,1	92,1	91,9	93,2	93,5	93,1	94,3	94,6	94,1	95,3	95,7	95,1
75	92,7	92,7	92,6	93,8	94,0	93,7	94,7	95,0	94,6	95,6	96,0	95,4
90	93,0	93,0	92,9	94,1	94,2	94,0	95,0	95,2	94,9	95,8	96,1	95,6
110	93,3	93,3	93,3	94,3	94,5	94,3	95,2	95,4	95,1	96,0	96,3	95,8
132	93,5	93,5	93,5	94,6	94,7	94,6	95,4	95,6	95,4	96,2	96,4	96,0
160	93,8	93,8	93,8	94,8	94,9	94,8	95,6	95,8	95,6	96,3	96,6	96,2
200	94,0	94,0	94,0	95,0	95,1	95,0	95,8	96,0	95,8	96,5	96,7	96,3
250	94,0	94,0	94,0	95,0	95,1	95,0	95,8	96,0	95,8	96,5	96,7	96,5
315-375	94,0	94,0	94,0	95,0	95,1	95,0	95,8	96,0	95,8	96,5	96,7	96,6

02. STANDARDS

Motors MS, TA, TC Series are compliant with the following Standards:

RATING AND PERFORMANCES
IEC 60034-1 CEI EN 60034-1

METHODS FOR DETERMINING LOSSES AND EFFICIENCY IEC 60034-2 CEI EN 60034-2
ROTATING ELECTRICAL MACHINES, PART 30, EFFICIENCY CLASSES OF SINGLE SPEED, THREE-PHASE INDUCTION MOTORS (IE CODE)
IEC 60034-30-2

CLASSIFICATION OF DEGREES OF PROTECTION (IP CODE) IEC 60034-5 CEI EN 60034-5

METHODS OF COOLING (IC CODE) IEC 60034-6 CEI EN 60034-6

CLASSIFICATION OF TYPE OF CONSTRUCTION MOUNTING ARRANGEMENTS (IM CODE) IEC 60034-7 CEI EN 60034-7

TERMINAL MARKINGS AND DIRECTION OF ROTATION IEC 60034-8 CEI 2-8

NOISE LIMITS IEC 60034-9 CEI EN 60034-9

BUILT-IN THERMAL PROTECTIONS IEC 60034-11

STARTING PERFORMANCE OF ROTATING ELECTRICAL MACHINES IEC 60034-12 CEI EN 60034-12

MECHANICAL VIBRATIONS IEC 60034-14 CEI EN 60034-14

DIMENSIONS AND OUTPUTS FOR ELECTRICAL MACHINES CEI EN 50347 IEC 60072-1 IEC60072-2

Mechanical standard dimensions are given in accordance to the following norms:
UNEL 13113-71 for B3 shape and its derivatives
UNEL 13117-71 for B5 shape and its derivatives
UNEL norms are compliant with the international rules IEC, issuing 72, and its relative amendment n. 1

CEI 16-8 - IEC1293 ELECTRICAL APPAREL MARKING
IEC TS 60034-25 GUIDE FOR THE DESIGN AND PERFORMANCE OF CAGE INDUCTION MOTORS SPECIFICALLY DESIGNED FOR CONVERTER SUPPLY
IEC TS 60034-18-41 PARTIAL DISCHARGE FREE ELECTRICAL INSULATION SYSTEMS (TYPE I) USED IN ROTATING ELECTRICAL MACHINES FED FROM VOLTAGE CONVERTERS - QUALIFICATION AND QUALITY CONTROL TESTS

UNI ISO 2768/1-2 GENERAL TOLERANCES
UNI 321 SHAFT DIMENSIONS
2014/35/UE LOW VOLTAGE DIRECTIVE
2014/30/UE (EMC) DIRECTIVE OF ELECTROMAGNETIC COMPATIBILITY
2006/42/CE MACHINERY DIRECTIVE
UL-CSA Norms
ECOENERGY DESIGN 2009/125/EC

The motors described into this catalogue satisfy the requirements of the UL Norms
1004-1 Rotating Electric Machines - General Requirements, First
Edition, and of the Norms CSA C22.2 No. 100-04, Motors and Generators,
Sixth Edition. Certificate CSA-UL n. 2073480-E323353 master 224693

High efficiency motors described into this catalogue are compliant with the American standard for high efficiency Nem Premium - Certification of compliance with Energy Efficiency standards for electric motors in accordance with the requirements listed in the Title 10 od the Code of Federal Regulations, Part 431(10CFR Part 431), Energy Conservation Program for Certain Commercial and Industrial Equipment and Part C of the Energy Policy and Conservation Act., 42 U.S.C. 6311 et seq. U.S. Department of Energy (DOE) Compliance Certification Number N. CC 096A.

EAC Conformity Declaration:
Motors are compliant with the following Technical Rules of the Russian, Bielorussian, Kazakhstanian Custom Union.
- TP TC 004/2001 Low Voltage
- TP TC 020/2011 EMC

03. MOUNTING AND POSITIONS

Frame according to IEC 60034-7, are defined in the following table:

FIGURE	STANDARDS			FRAME SIZES		
	CEI 2-14	IEC 60034-7		56-160	180-280	315-355
		Code I	Code II			
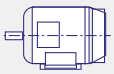	B 3	IM B 3	IM 1001	standard		
	B 3/B 5	IM B 35	IM 2001	standard		
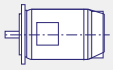	B 5	IM B 5	IM 3001	standard	standard	upon request
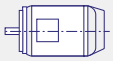	B14	IM B14	IM 3601	standard	-	-
	B 8	IM B 8	IM 1071	standard	upon request	upon request
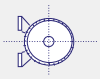	B 6	IM B 6	IM 1051	standard	upon request	upon request
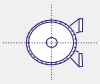	B 7	IM B 7	IM 1061	standard	upon request	upon request
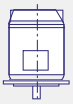	V 1	IM V 1	IM 3011	standard		
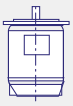	V 3	IM V 3	IM 3031	standard	standard	upon request
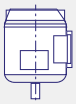	V 5	IM V 5	IM 1011	upon request	upon request	upon request
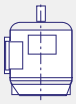	V 6	IM V 6	IM 1031	upon request	upon request	upon request
	V 1 / V 5	IM V 15	IIM 2011	standard	standard	upon request

04. INGRESS PROTECTION

The ingress protection degrees according to IEC 60034-5 standards, are:
IP 55 (standard) totally enclosed motors, fan cooled, protected against penetration of dust and water splashes coming from any direction.
IP 56 (upon request) totally enclosed motors, protected against dust penetration and against sea waves, for use on deck.
Normally IP56 motors are supplied with external fan (IC 411 - IC 416 or IC 418).
Upon request they can be supplied without fan (IC410). In this case the features, outputs and technical data will be supplied upon request.
The external fan is covered by a fan cover with IP 20 protection degree, in line with safety standards.
Motors for vertical mounting V1, V5, V1N5, are supplied with rain cover.
The terminal box, in aluminium or cast iron, has IP55 or IP56 protection degree.

05. GENERAL COSTRUCTION FEATURES

Motors have been designed and manufactured in compliance with international standards.

TA and MS series are available from frame size 56 to frame size 200.
Frames and terminal boxes are in aluminum, fan cover is in steel sheet, flanges and shields are in aluminum.

TC serie is avilable from frame size 132 to frame size 355.
Frame and terminal box are in cast iron, fan cover is in steel sheet, flanges and shields are in cast iron.

The terminal box is as standard on the top of the motor. From frame size 56 to 280 it can be rotated in step of 90°, to easily transform motors to configuration with terminal box on the left or on the right.

Fans are in nylon, upon request can be supplied with fans in aluminium or in steel sheet.
Feet are removable, on all series, from frame size 56 to frame size 280.

Components	Series	Shaft height														
		63	71	80	90	100	112	132	160	180	200	225	250	280	315	355
Shield	D-end	MS	Aluminum													
		TA	Aluminum													
		TC						Cast iron								
	ND-end	MS	Aluminum													
		TA	Aluminum													
		TC						Cast iron								
Flange	B5	MS	Aluminum													
		TA	Aluminum													
		TC						Cast iron								
	B14	MS	Aluminum													
			Aluminum													
		TC						Cast iron								
Cover fan		MS	Sheet metal													
		TA	Sheet metal													
		TC	Sheet metal													
Fan		MS/TA	Polypropylene													
		TC						Polypropylene								Polyamide
Terminal box		MS/TA	Aluminum													
		TC						Cast iron								
Removable feet		MS/TA	Yes													
								Yes							No	

MECHANICAL TOLERANCES

Component	Dimensions		Tolerance
Axis Height	H up to frame 250		-0,5 mm
	H bigger than frame 250		-1 mm
Shaft-end	DE-NDE	Ø 11-28	j6
		Ø 38-48	k6
		Ø ≥ 55	m6
Key	DE-NDE		h9
Flange	N	Ø < 250	j6
		Ø ≥ 250	h6

06. COOLING

The designation of cooling method is given by the IC (International Cooling) code, according to IEC 60034-6

Code I (Simplified) IC _ _ _

Circuit Arrangement I

Method of fluid circulation for the secondary cooling fluid.

Method of fluid circulation for the primary cooling fluid.

Motors in standard execution of frame sizes from 56 to 355 are supplied with IC 411 cooling systems, incorporating a bidirectional fan.
All frame sizes can be supplied with cooling system IC 416 on request.
In this case a proper fan is fitted inside the fan cover, suitably reinforced, in order to make the ventilation independent on the rotational speed.

IC CODE	FIGURE	DESCRIPTION	NOTE
IC 411	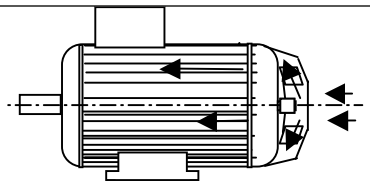	Self ventilating motor. Enclosed machine. Externally finned. External shaft-mounted fan.	Standard
IC 416	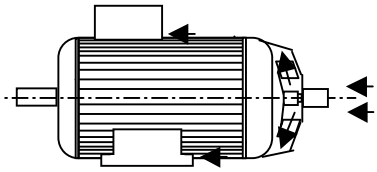	Motor with assisted ventilation. Enclosed machine. Externally finned. Independent external fan mounted inside the fan cover.	Upon request
IC 418	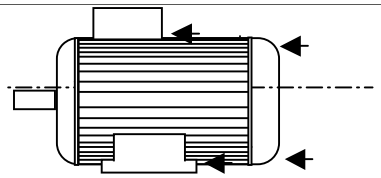	Motor with external ventilation. Enclosed machine. Externally finned ventilation provided by air flowing from the driven system.	Upon request
IC 410	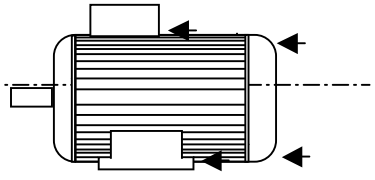	Motor with natural ventilation. Enclosed machine.	Upon request

07. BEARINGS

Motors TA and MS series from frame size 56 to frame size 200 have sealed pre-lubricated ball bearings, DE and NDE side, C3 type.
Motors TC series frame from size 132 to frame size 200 have sealed pre-lubricated ball bearings, DE and NDE side, C3 type.
Motors TC series from frame size 225 to frame size 280 (including 315 2-poles) have ball bearings, DE and NDE side, C3 type.
Motors TC series from frame size 315 (4-6-8-poles) to frame size 355, have roller bearings DE side and ball bearings NDE side.
All non pre-lubricated bearings need to be periodically re-lubricated according to the data given in the motors maintenance manual.
Motor with axially constrained bearing have an arrangement with a spring in order to absorb vibrations.
The lifetime of bearings (in accordance with supplier data and ideal working conditions) is on 40.000 hours, for motors with direct coupling.

In the table are mentioned all specifications concerning bearings installed on motors frame sizes 56-355

MOTOR TYPE	POLES	MOUNTING B3		MOUNTING B5/B14	
		Bearing coupling side DE	Bearing opposite coupling side NDE	Bearing coupling side DE	Bearing opposite coupling side NDE
TA/MS 56	2-4-6-8	6201-2RS-C3	6201-2RS-C3	6201-2RS-C3	6201-2RS-C3
TA/MS 63	2-4-6-8	6201-2RS-C3	6201-2RS-C3	6201-2RS-C3	6201-2RS-C3
TA/MS 71	2-4-6-8	6202-2RS-C3	6202-2RS-C3	6202-2RS-C3	6202-2RS-C3
TA/MS 80	2-4-6-8	6204-2RS-C3	6204-2RS-C3	6204-2RS-C3	6204-2RS-C3
TA/MS 90	2-4-6-8	6205-2RS-C3	6205-2RS-C3	6205-2RS-C3	6205-2RS-C3
TA/MS 100	2-4-6-8	6206-2RS-C3	6206-2RS-C3	6206-2RS-C3	6206-2RS-C3
TA/MS 112	2-4-6-8	6306-2RS-C3	6206-2RS-C3	6306-2RS-C3	6206-2RS-C3
TA/MS 132	2-4-6-8	6308-2RS-C3	6208-2RS-C3	6308-2RS-C3	6208-2RS-C3
TA/MS 160	2-4-6-8	6309-2RS-C3	6209-2RS-C3	6309-2RS-C3	6209-2RS-C3
TA/MS 180	2-4-6-8	6311-2RS-C3	6211-2RS-C3	6311-2RS-C3	6211-2RS-C3
TA/MS 200	2-4-6-8	6312-2RS-C3	6212-2RS-C3	6312-2RS-C3	6212-2RS-C3
TC 132	2-4-6-8	6308ZZ-C3	6308ZZ-C3	6308ZZ-C3	6308ZZ-C3
TC 160	2-4-6-8	6309ZZ-C3	6309ZZ-C3	6309ZZ-C3	6309ZZ-C3
TC 180	2-4-6-8	6311ZZ-C3	6311ZZ-C3	6311ZZ-C3	6311ZZ-C3
TC 200	2-4-6-8	6312ZZ-C3	6312ZZ-C3	6312ZZ-C3	6312ZZ-C3
TC 225	2-4-6-8	6313-C3	6313-C3	6313-C3	6313-C3
TC 250	2-4-6-8	6314-C3	6314-C3	6314-C3	6314-C3
TC 280	2-4-6-8	6316-C3	6316-C3	6316-C3	6316-C3
TC 315	2	6317-C3	6317-C3	6317-C3	6317-C3
TC 315	4-6-8	NU319	6319-C3	NU319	6319-C3
TC 355	2	6319-C3	6319-C3	6319-C3	6319-C3
TC 355	4-6-8	NU322	6322-C3	NU322	6322-C3

Upon request it can be mounted roller bearings (at DE side), where non-standard, insulated bearings (at NDE side), and reinforced bearings (at NDE side).

08. TERMINAL BOX

The terminal board is normally equipped with 6 terminals and is made with non hygroscopic and mildew resistance material.
Terminal box for TA and MS series is made in aluminum, for TC series in cast iron.
Terminal box has IP55 standard protection degree or IP56 (upon request).
In the series TA and MS from size 56 to size 90 terminal box is equipped with one cable gland and one plug; from size 100 to size 200 is equipped with two cable glands; from size 160 and up it is also avaiable one cable gland M16x1,5 for PTC connection.
In the TC series terminal box is equipped with two cable glands on all sizes. From size 160 and up it is also avaiable one cable gland M16x1,5 for PTC connection.

The following table resumes the available configurations:

FRAME	CABLE GLAND
TA/MS 56	1-M16x1,5
TA/MS 63	1-M16x1,5
TA/MS 71	1-M20x1,5
TA/MS 80	1-M20x1,5
TA/MS 90	1-M20x1,5
TA/MS 100	2-M20x1,5
TA/MS 112	2-M25x1,5
TA/MS 132	2-M25x1,5
TA/MS 160	2-M32x1,5+1-M16x1,5
TA/MS 180	2-M40x1,5+1M16x1,5
TA/MS 200	2-M40x1,5+1M16x1,5
TC 132	2-M25x1,5
TC 160	2-M32x1,5+1M16x1,5
TC 180	2-M32x1,5+1M16x1,5
TC 200	2-M40x1,5+1M16x1,5
TC 225	2-M50x1,5+1M16x1,5
TC 250	2-M50x1,5+1M16x1,5
TC 280	2-M50x1,5+1M16x1,5
TC 315	2-M63x1,5+1M16x1,5
TC 355	2-M63x1,5+1M16x1,5

TERMINAL BOX POSITION AND CABLE GLAND POSITION

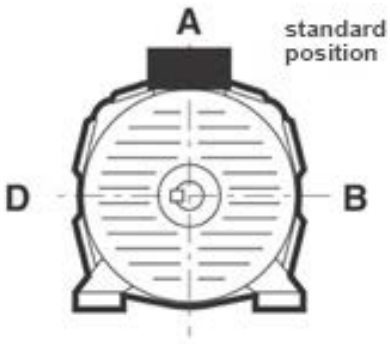

Terminal box position respect to to the motor shaft end

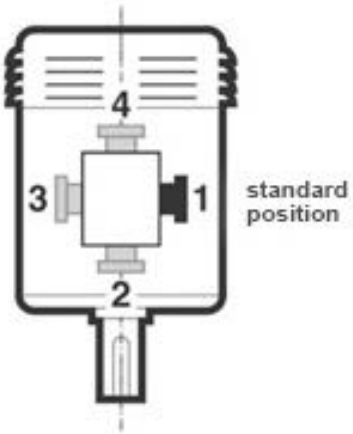

Cable gland position respect to the motor shaft end

09. CONNECTION

Single speed motors

connection star Y
highest voltage on plate

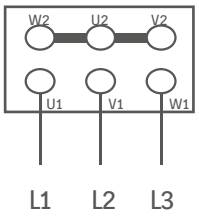

connection delta Δ
lower voltage on plate

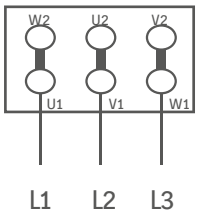

Double speed motors

Dahlander
single winding
6 terminals

lower speed

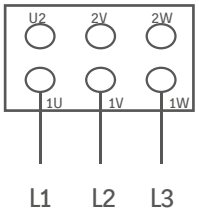

higher speed

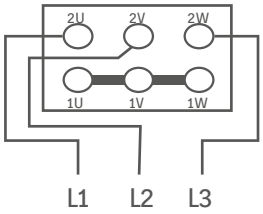

Two separate windings
6 terminals

lower speed

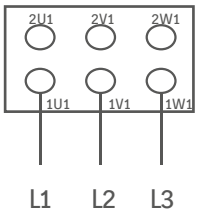

higher speed

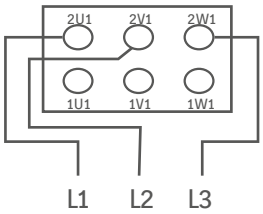

SIMOTOP® GROUP

10. NAMEPLATE

Efficiency of motors not subject to the norms (up to 0,55kW power) or in IE1 class is provided at 100% of the rated load.

Motors subject to the efficiency classification level IE2, IE3 and IE4, in accordance to the standard IEC 60034-30-2 and to the European commission regulation No. 640/2009, on the plate will report the nominal efficiency level at full, 3/4 and 2/4 of the rated load.

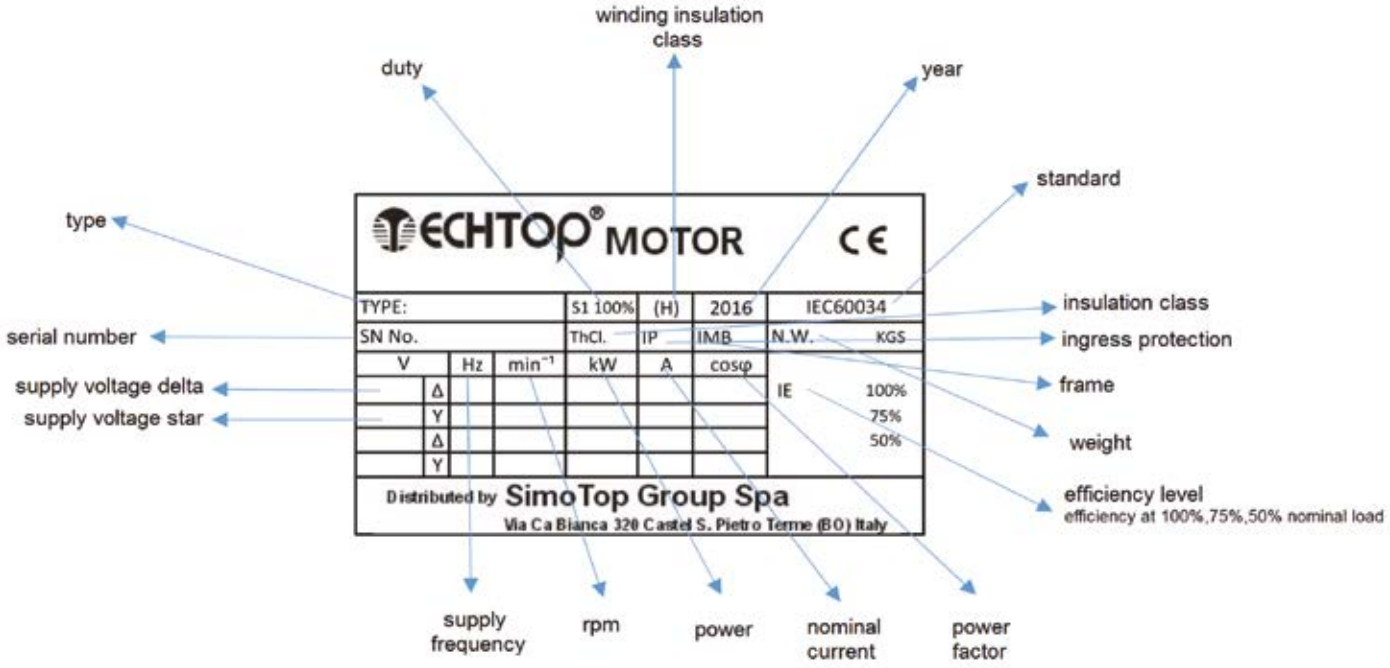

FORCED VENTILATION PLATE

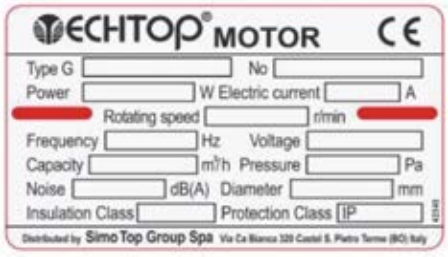

ATEX 3GD PLATE

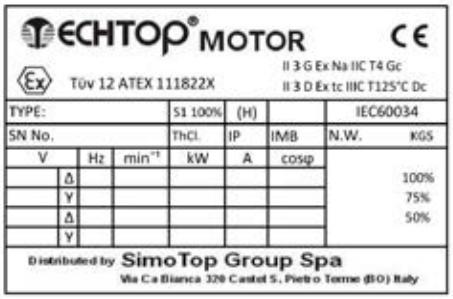

CSA/UL PLATE

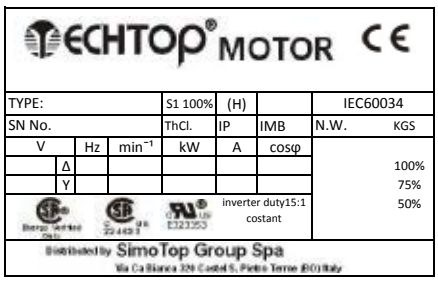

CSA/UL NEMA PREMIUM PLATE

11. INSULATION, WINDING

The motors of the series MS, TA, TC are made in F insulation class.
The soft copper electrolytic wire is insulated by using a special enamel (double enamel). Such enamel is classified as H insulation class.
All insulating materials used to produce motors are in F or H insulation class.
The winding undergoes a treatment as follows: it is impregnated by soaking it in oven-curing F class resins, it is tropicalized following a process including a spraying of anti-salty enamel and, finally, it is coated using a spray with heatproof, humidity-proof, chemical agent and sea-ambient corrosive action resistant characteristics.
The impregnation cycle is carried out under vacuum.

12. RATINGS AND TECHNICAL DATA

Power and data reported in the Technical Data Tables are for continuous duty (S1) at an ambient temperature of 40 °C, max. altitude 1000 meters a.s.l., with supply at 400V-50Hz.
In such conditions, the temperature rise reached by the motors is lower than the one provided by the B insulation class.
The operating characteristics are guaranteed within the tolerances defined by the CEI EN 60034-1 Standards and the IEC 60034-1 Recommendations, reported in the table:

CHARACTERISTICS	TOLERANCES
Efficiency	Motor power < 50 kW -15% di (1 - η) Motor power > 50 kW -10% di (1 - η)
Power factor	+1/6 (1- cosφ) Min 0.02 Max 0.07
Locked rotor current	+20% of guaranteed value
Locked rotor torque	-15% + 25% of guaranteed value
Pull out torque	-10% of guaranteed value
Slip	± 20% of guaranteed value

13. SUPPLY VOLTAGE

Motors series MS, TA, TC from frame size 56 to frame size 250 are designed to be used with a power supply at rated voltages from 220V to 690V respectively at 50Hz and at 60Hz; from frame size 280 to frame size 355 are designed to be used with a power supply at rated voltages from 400V to 690V respectively at 50Hz and at 60 Hz.

Standard rated voltages of the motors usually in stock are:
- 230/400V 50Hz from frame size 56 to frame size 100;
- 400/690V 50Hz from frame size 112 to frame size 355.

Lower voltage is made with delta connection while the higher voltage is made with star connection.
In these supply conditions efficiencies are in compliance with the IEC 60034-30.

14. VOLTAGE AND FREQUENCY VARIATIONS

Motors can work without failures if the supply voltage variations are limited as stated in the Classification Society Standards. In particular, motors can run with voltage variations of 10% and frequency variations of 5% with a maximum combined variation of 10% with temperature rise in compliance with the provisions of the Classification Society Standards.

15. OPERATION AT 60Hz FREQUENCY

The motors can run with a supply frequency of 60Hz with differences in performances. Adjustment in the motor features can be obtained by applying the multiplicative coefficients as described in the following table. For motors made at 50Hz and supplied at 60Hz, efficiency class of the motor at 50Hz is no longer valid.

PLATE VOLTAGE	PLATE VOLTAGE	NOMINAL POWER	NOMINAL CURRENT	NOMINAL TORQUE	RPM	STARTING CURRENT	STARTING TORQUE	MAX TORQUE
50 Hz	60 Hz							
230 +/- 10%	220 +/- 5%	1	1	0.83	1.2	0.83	0.83	0.83
230 +/- 10%	230 +/- 10%	1	0.95	0.83	1.2	0.83	0.83	0.83
230 +/- 10%	254 +/- 5%	1.15	1.02	0.96	1.2	0.93	0.93	0.93
230 +/- 10%	277 +/- 5%	1.2	1	1	1.2	1	1	1
400 +/- 10%	380 +/- 5%	1	1	0.83	1.2	0.83	0.83	0.83
400 +/- 10%	400 +/- 10%	1	0.95	0.83	1.2	0.83	0.83	0.83
400 +/- 10%	440 +/- 5%	1.15	1.02	0.96	1.2	0.93	0.93	0.93
400 +/- 10%	460 +/- 10%	1.15	1	0.96	1.2	0.96	0.96	0.96
400 +/- 10%	480 +/- 5%	1.2	1	1	1.2	1	1	1

16. DERATINGS

The tables of the technical data are referred to an ambient temperature of 40°C and an altitude up to 1000 meters a.s.l.
In different environmental conditions output ratings vary, and are obtainable by applying the factors as mentioned in the following table, maintaining the temperature rise provided by the B insulation class.

ALTITUDE (m) a.s.l	AMBIENT TEMPERATURE (°C)					
	30	30-40	45	50	55	60
<= 1000	1.06	1	0.97	0.94	0.90	0.87
1500	1.04	0.97	0.94	0.91	0.87	0.84
2000	1	0.95	0.92	0.88	0.84	0.81
3000	0.96	0.89	0.86	0.82	0.78	0.74
4000	0.91	0.84	0.80	0.76	0.72	0.67

In case the temperature rise permitted for the F insulation class is used, the corrective factors are the same mentioned in the following table:

ALTITUDE (m) a.s.l	AMBIENT TEMPERATURE (°C)					
	30	30-40	45	50	55	60
<= 1000	1.17	1.12	1.09	1.06	1.03	1
1500	1.15	1.10	1.07	1.04	1.01	0.97
2000	1.13	1.07	1.04	1.01	0.98	0.95
3000	1.08	1.02	0.99	0.96	0.93	0.89
4000	1.04	0.97	0.94	0.91	0.87	0.84

17. SERVICES

IEC 60034-1 Norms defines nine different kind of services for the electrical machines, which correspond to the most common working conditions that can be found in all the field of application.

Among these nine cases it is always possible to identify all the practical cases that could occur, generally by means of a proper thermal equivalence.

Technical data reported in the tables are relative to the continuous service S1.
Motors have been designed to operate in continuous service S1 at the nominal power.
In the real cases motors works mostly in a non-continuous service and can operate few minutes a day, or all day long. Working cycles can strongly vary with the kind of application. In all these cases the motor reaches a temperature which differs from the case of a continuous service.
In such cases to avoid damages to the stator winding or to the rotor due to overheating, will have to be considered the hereunder mentioned operational intermittent cycles foreseen by the IEC 60034-1 Norms.

Service S1
Continuos service. The motor is running with a constant load lasting long enough to let the motor reaching its thermal equilibrium conditions. This kind of service can be recognised when the machine works under a constant load for a time bigger than 3-4 times the value of the machine thermal time constant.

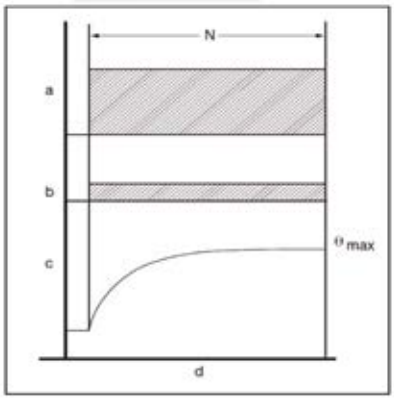

a	=	Load
b	=	Electrical losses
c	=	Motor temperature
d	=	Time
N	=	Motor running time with constant load
Θmax	=	Maximal reached motor temperature

Service S2
Limited duration service. The motor is running with a constant load and a duration which prevents the motor to reach its thermal equilibrium conditions.
This kind of service can be recognised when the machine works under a constant load for a period of time lower than 3 times the value of the machine thermal time constant, followed by a pause lasting at least 3-4 times the value of the machine thermal time constant, that has to be enough to cool down the machine to the ambient temperature.

During the pause time the machine is disconnected from the power supply network. In accordance to the norms, the standard time interval that can be specified are 0,5/1/3/5/10/30/60/90 minutes.

In order to define the service on the motor nameplate, it has to be specified S2 followed by the time interval and the relative power (es. S2 10min. 20kW).

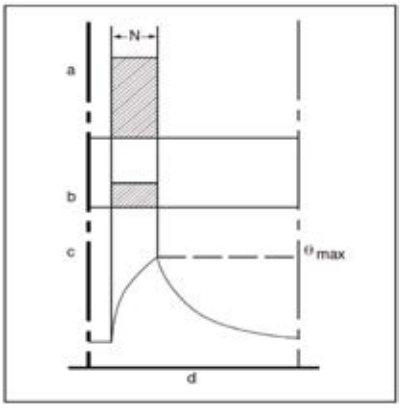

a	=	Load
b	=	Electrical losses
c	=	Motor temperature
d	=	Time
N	=	Motor running time with constant load
Θmax	=	Maximal reached motor temperature

Service S3
Intermittent and Periodical service. The motor is running with a periodical loading cycle, composed by a time interval of constant load and a steady period with disconnection from the power supply network. The above mentioned running time intervals are not long enough to let motor reaching its thermal equilibrium conditions.

It is allowed to state such kind of service only in case the starting current does not affect the over-temperature significatively. In order to define the service on the motor nameplate, it has to be specified S3 followed by the intermittence ratio N/(N+R)*100%, by the cycle duration t in minutes and the relative power (es. S3 25% 45min. 20kW).

If the cycle duration is not specified, the standard cycle is headed on 10 minutes.

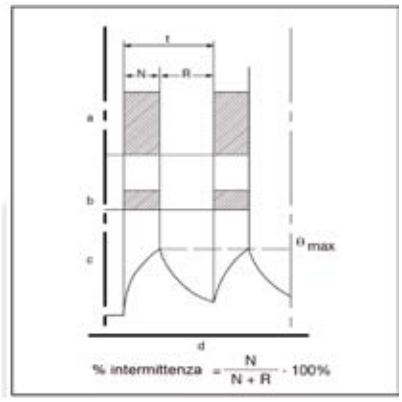

a = Load
b = Electrical losses
c = Motor temperature
d = Time
N = Motor running time with constant load
Θmax = Maximal reached motor temperature
R = Pause time
t = Cycle duration

Service S6
Uninterrupted Periodical service with Intermittent load. The motor is running in accordance to a periodical cycle, composed by a time interval of constant load and a period of operation with no-load.

In this case no resting period is granted as the machine is always connected to the power supply network. In order to define the service on the motor nameplate, like for the S3 service,

it has to be specified S6 followed by the intermittence ratio N/(N+R)*100%, by the cycle duration t in minutes and the relative power (es. S6 25% 45min. 20kW). If the cycle duration is not specified, the standard cycle is headed on 10 minutes.

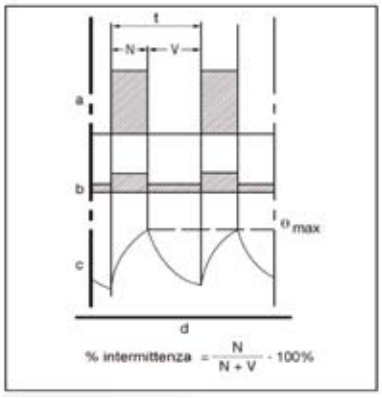

a = Load
b = Electrical losses
c = Motor temperature
d = Time
N = Motor running time with constant load
Θmax = Maximal reached motor temperature
t = Cycle duration
V = Motor running time with no-load

The additional type of services are:
S4 periodical intermittent service with starting
S5 periodical intermittent service with electrical braking
S7 uninterrupted service with electrical braking
S8 periodical uninterrupted service with load and speed related variations
S9 service with non-periodical load and speed variations

For such kind of services kindly contact the technical department of Simotop Group Spa

18. OVERLOADS

Continuous duty motors can withstand the following overloads:

OVERLOAD %	DURATION MINUTES	TIME INTERVAL MINUTES
10	10	15
20	6	15
30	4	15
40	3	15
50	2	15

In these operating overload conditions, the considered over temperature limit is the one of F insulation class.

19. STARTING

Motors are suitable for the following types of starting:
- Direct
- Star-Delta
- By autotransformer
- Soft-start (*)
- By inverter (**)

(*) When the starting ramp is completed soft-start should be by-passed. Precaution must be used also when the motor will be powered with inverter.
(**) See the relative recommendations in the paragraph n. 23 (“Inverter Supply”)

20. BALANCING AND VIBRATION GRADES

Techtop motors are dynamically balanced with one half key applied to the shaft extension in accordance to the standard ISO 8821. In the standard execution vibration severity grade is A, in accordance to the standard IEC 60034-14:2003, for motors with nominal speed from 600 rpm/min to 3600 rpm/min.
Grade A applies to motors with no special vibration requirements, for special vibration requirements applies grade B.
Highest vibrations level can occur on motors installed on site, due to various factors not usually attributable to the motor but to the uncorrect installation.

VIBRATION GRADE	MOUNTING	SHAFT HEIGHT (mm) 56 ≤ H ≤ 132			SHAFT HEIGHT (mm) 132 < H ≤ 280			SHAFT HEIGHT (mm) H> 280		
		Displacement µm	Speed mm/sec	Acceleration m/sec²	Displacement µm	Speed mm/sec	Acceleration m/sec²	Displacement µm	Speed mm/sec	Acceleration m/sec²
A	Free suspension		1.6	2.5	35	2.2	3.5	45	2.8	4.4
	Rigid mounting		1.3	2.0	29	1.8	2.8	37	2.3	3.6
B	Free suspension		0.7	1.1	18	1.1	1.7	29	1.8	2.8
	Rigid mounting				14	0.9	1.4	24	1.5	2.4

(*) Rigid mounting is not considered acceptable for machines with shaft heights less than 132
Instrumentation can have a measurement tollerance of ± 10%
Free suspension condition is achieved by suspending the machine on a spring or by mounting on a elastic support (spring, rubber, etc..)
Motors, on request, can be supplied also with vibration grade B.
Limits for the maximum shaft vibration and the maximum run-out, according to ISO 7919-1 Standard, provided in the table below:

VIBRATION GRADE	SPEED RANGE MIN^{-1}	MAXIMUM RELATIVE SHAFT DISPLACEMENT	MAXIMUM COMBINED MECHANICAL AND ELECTRICAL RUN-OUT µm
A	> 1800	65	16
	≤ 1800	90	23
B	> 1800	50	12,5
	≤ 1800	65	16

21. NOISE

The technical features table lists the values of A-sound Pressure level (LpA) and A-sound Power level (LwA), measured at a one meter distance. Sound levels are measured in no-load conditions and have tolerances of 3 dB(A).

FRAME SIZE	A-sound pressure level (LpA) - A-sound power level (LwA) dB(A)							
	2-POLES		4-POLES		6-POLES		8-POLES	
	LpA	LwA	LpA	LwA	LpA	LwA	LpA	LwA
56	69	78	63	72	58	67	54	63
63	75	84	67	76	61	70	58	67
71	75	84	67	76	61	70	58	67
80	75	84	70	79	63	72	61	70
90	75	85	70	80	66	76	66	76
100	77	87	70	80	66	76	66	76
112	78	88	73	83	66	76	66	76
132	69	78	63	72	58	67	54	63
160	75	84	67	76	61	70	58	67
180	75	84	67	76	61	70	58	67
200	75	84	70	79	63	72	61	70
225	75	85	70	80	66	76	66	76
250	77	87	70	80	66	76	66	76
280	78	88	73	83	66	76	66	76
315	80	90	77	87	73	83	69	79
355	86	97	84	96	82	94	79	91

The values of the Sound Pressure (LpA) and of the Sound Power (LwA) in the table are related to the operation at 50Hz. If the power supply frequency changes these values have to be adjusted as indicated in the following table:

SUPPLY FREQUENCY Hz	% VALUE OF THE NOISE LEVEL COMPARED TO THE 50Hz VALUE
10	60%
20	60%
30	70%
40	100%
50	100%
60	100%
80	120%

22. THERMAL PROTECTIONS

All the Techtop motors IE2, IE3, IE4 from frame size 80 to frame size 355 are equipped with the Positive Temperature Coefficient thermistors PTC. These protections are featured by variable resistance that changes with their actual temperature. This kind of protections, upon request, can be installed also on frame size 56 to frame size 132.

Resistance of PTC, for nominal operating temperature (TK), will be satisfying the following values:

- < 250 Ohm from temperature from -20°C to TK-20°C
- < 550 Ohm at a temperature of TK-5°C
- > 1330 Ohm at a temperature of TK+5°C
- > 4000 Ohm at a temperature of TK+15°C

In accordance to the standards, our motors are supplied with n. 3 PTC installed in series. Actual resistance value range to be considered for disengagement of the power supply is between 1650 Ohm and 4000 Ohm, and takes place in the temperature range from TK-5°C to TK+5°C.

Values of TK related with the class of insulation are the following:

CLASS OF INSULATION	OPERATING TEMPERATURE LIMIT OF THE INSULATION °C	TK °C
A	105	95-100
E	120	110-115
B	130	120-125
F	155	145-150
H	180	170-175

The nominal operating temperature of the thermistors PTC, mounted on the Techtop motors is 150°C. Maximum supply voltage of the PTC thermistors is 2,5V.

Below the characteristic resistance/temperature curve of the PTC thermistors:

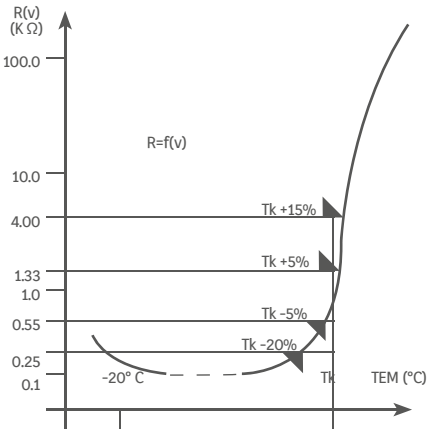

Upon request, the following thermal protections can be installed on the motors:

Bimetallic devices
Motor protectors with contact normally closed. The contact opens when the winding temperature reaches limits dangerous to the insulation system of the motor.

Platinum resistance thermometers PT100
Variable linear resistance changing with the winding temperature. Device particularly suitable for a continuous winding temperature monitoring.

The protection is normally made by 3 sensitive elements, one for each phase, connected in series. The sensor terminals are led to a specially provided terminal board located in the main or in an auxiliary terminal box.

23. ANTICONDENSATION HEATERS

Motors subject to atmospheric condensation, either through standing idle in damp environments or because of wide ambient temperature variations, may be fitted with anticondensation heaters.
They are of tape form and are normally mounted on the stator winding head.
Anticondensation heaters are normally switched on automatically when the supply to the motor is interrupted, heating the motor to avoid water condensation.

Normal supply voltage is 115 V or 220/240V.

Anticondensation heater terminals are led to a specially provided terminal board located in the main terminal box. Upon request they can be led to a terminal board located in an auxiliary terminal box.

The power values normally used are shown in the table :

FRAME SIZE	SUPPLY VOLTAGE (V)	LENGTH mm	POWER (W)
80	110	203	8
	220/240	203	8
90	110	305	22
	220/240	305	25
100	110	432	27
	220/240	432	26
112	110	686	21
	220/240	686	21
132/160	110	686	40
	220/240	686	40
180/200	110	762	25
	220/240	762	26
225/250	110	1016	39
	220/240	1016	42
280	110	1067	50
	220/240	1067	54
315	110	1702	103
	220/240	1702	99
355	110	1702	103
	220/240	1702	99

Drainage hole

Motors of series MS, TA, TC are provided with holes for the discharge of condensate closed with a plug to guarantee the degree of protection IP reported on plate. As a function of the operating conditions such plugs can be removed to allow the discharge of condensate that may for inside the motor.

TC series motors from size 160 to size 355 are fitted with a special brass drainage cap that guarantees the degree of protection IP55 allows the condensation to drain without having to remove the cap.

24. INVERTER SUPPLY

The motors of the TA,TC and MS series are designed to be powered by inverter,in particular the stator winding has a vacuum pressure impregnation cycle (VPI system) and phase separators are provided in the winding heads.
Motors pawered by inverters up yo a frequency of 50 Hz (motor winding at 50Hz) and rated voltage have costant torque operation (costant flow field), over 50Hz the torque starts to drop and the motor runs at costant power (weaking range of the flow).

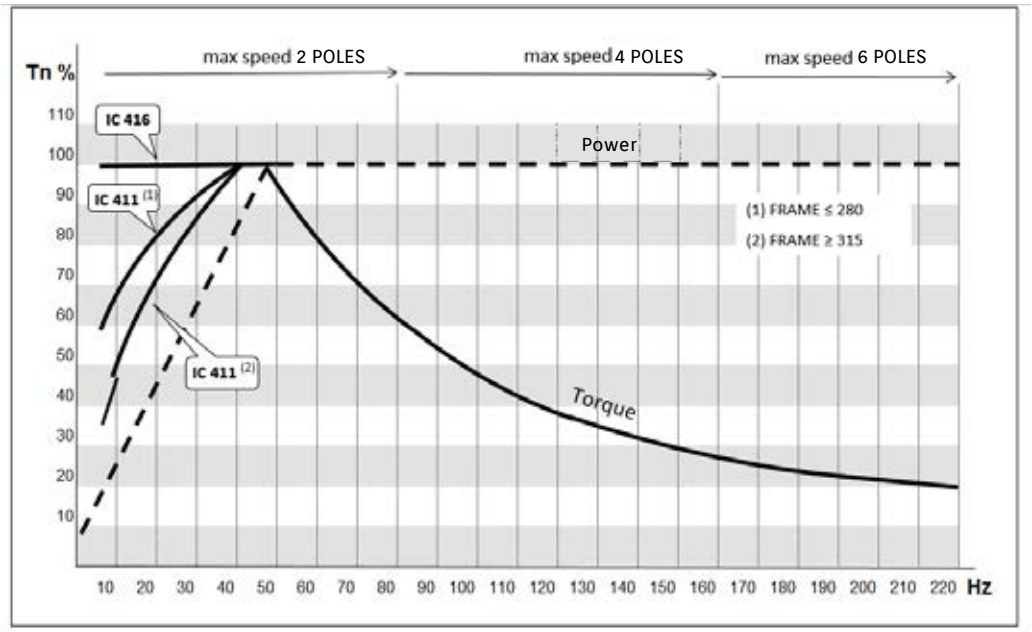

It must be considered that for frequencies below 50Hz (motor winding at 50Hz) the motor ventilation is reduced, for this reason if the application requires it, TA,TC and MS series motors, on request, can be equipped with an auxiliary fan (cooling system IC 416);in this configuration the motors are able to supply the nominal torque in continuos duty S1 even at low speed.
Generally self-ventilated motors (IC411 cooling system) are suitable for loads with quadratic trend respect to the speed, the typical cases are centrifugal pumps and fans.
In the diagram shown in fig. 1 it is possible to establish the motor performance based on speed.
In fig. 1 the motor performance is indicated starting from 5Hz,for lower frequency values, performance is strongly conditioned by the type of control and the quality of the inverter. The inverter is a device that feeds the motor with a non-sinusoidal voltage with a certain harmonic content, this feature added to the influence of the supply powers cables, can significantly affect the performance of the motor in this area.

When the inverters are used, particular attention must be given to the insulation of the motor, the fast voltage fronts present at the motor supply terminals (dV / dT = Vpk peak voltage) caused by the reduced IGBT switching times, produce considerable stresses on the insulating materials. The supply voltage and the length of the motor supply power cables contribute to amplifying the voltage peaks transmitted to the motor. There are several solutions to this problem, which can also be applied in combination with each other, to increase their effectiveness. The most common solutions to the problem presented are:

1) Insertion of a reactance at the inverter output.
2) Reduction of inverter switching frequency (caution; this solution increases motor noise).
3) Winding with reinforced insulation.
4) Insert dV / dT(peak voltage,Vpk, filters) filters in inverter output.
5) Insertion of sinusoidal filters at the inverter output.

FRAME	SUPPLY VOLTAGE ≤ 500V	
	PEAK VOLTAGE	PRECAUTIONS
≤ 250	Vpk ≤ 800V, time of voltage front ≥ 1μs	None
280 ÷ 315	Vpk ≤ 1.000V, time of voltage front ≥ 1μs	To evaluate by analyzing the application
≥ 355	Vpk ≤ 1.350V, time of voltage front ≥ 1μs	To evaluate by analyzing the application

Motors powered by inverters may be affected by eddy current phenomena caused by induced magnetic fields. The magnitude of these currents depends on the powers involved and on the characteristics of the inverter, normally motors with a power ≤ 75kW do not require special measures.
Eddy currents are the main cause of bearing damage in a short time, especially regarding the NDE bearing.
In the case of motors powered by inverters with power > 75kW to avoid the problem caused by eddy currents, Simotop recommends the use of an insulated bearing (normally provided on the NDE side of the motor), or alternatively brush devices able to protect the bearings from this phenomenon.
To avoid any damage to the motor when the motor is powered by an inverter, it is recommended to provide in the windings of the PTC type temperature sensors to be connected to the inverter protections or to a special motor protection device.
The above, together with a correct grounding of the motor - inverter - operating machine system, guarantees the best results.

25. MAXIMUM SPEED

Motors powered by inverters can operate at frequencies higher than the nominal one, supplying the nominal power up to the maximum frequency indicated in the table below.In these conditions the engine torque is reduced as indicated in the diagram of fig. 1.
In any case the motor maximum speeds, also at no load operation or dragged by the machine, must never eceeed the limit mentioned in the following table:

FRAME SIZE	MAX PERMISSIBLE SPEED			
	2 POLES	4 POLES	6 POLES	8 POLES
132	5000	5000	4500	4500
160	5000	5000	4500	4500
180	5000	5000	4500	4500
200	5000	5000	4500	4500
225	4500	4500	4000	4000
250	4000	4000	3800	3800
280	4000	3000	3000	3000
315	3600	2600	2600	2600
355	3600	2600	2600	2600

Maximum allowable curves, continuous duty S1, 2-4-6 poles motor with forced ventilation (IC416)

26. AUXILIARY FANS

All frame sizes can be supplied with cooling system IC 416 (forced ventilation) on request. In this case a proper fan is fitted inside the fan cover, suitably reinforced.
Consequently the ventilation is independent on the rotational speed of the motor itself.
This solution is particularly suitable for inverter supplied motors.

SIMOTOP® GROUP

26. AUXILIARY FANS

Auxiliary fans three phases

Motor size	Voltage	Output(W)	Current (A)	Speed (rpm)	Air Volume(m3/h)	Air Pressure (Pa)	Noise dB(A)
63	230/400V/50HZ	24	0,065	2800	45	40	62
	230/400V/60HZ	25	0,06	3300			
	460-480V/60HZ	32	0,07	3400			
71	230/400V/50HZ	35	0,1	2800	52	50	62
	230/400V/60HZ	25	0,07	3300			
	460-480V/60HZ	33	0,07	3300			
80	230/400V/50HZ	37	0,1	2700	58	60	62
	230/400V/60HZ	30	0,07	3100			
	460-480V/60HZ	35	0,08	3400			
90	230/400V/50HZ	45	0,1	2500	91	80	65
	230/400V/60HZ	45	0,08	2800			
	460-480V/60HZ	50	0,08	3200			
100	230/400V/50HZ	72	0,185	2750	142	80	67
	230/400V/60HZ	69	0,14	3150			
	460-480V/60HZ	75	0,13	3250			
112	230/400V/50HZ	85	0,175	2600	229	80	67
	230/400V/60HZ	95	0,16	2800			
	460-480V/60HZ	110	0,21	3000			
132	230/400V/50HZ	50	0,195	1450	337	35	69
	230/400V/60HZ	50	0,155	1650			
	460-480V/60HZ	60	0,2	1700			
160	230/400V/50HZ	60	0,2	1400	609	40	72
	230/400V/60HZ	72	0,18	1600			
	460-480V/60HZ	110	0,29	1600			
180	230/400V/50HZ	80	0,22	1350	686	55	72
	230/400V/60HZ	100	0,2	1500			
	460-480V/60HZ	145	0,32	1600			
200	230/400V/50HZ	110	0,23	1250	1679	65	72
	230/400V/60HZ	140	0,25	1300			
	460-480V/60HZ	155	0,32	1600			
225	230/400V/50HZ	170	0,37	1350	1786	70	74
	230/400V/60HZ	250	0,43	1500			
	460-480V/60HZ	240	0,45	1550			
250	230/400V/50HZ	200	0,55	1400	1813	80	75
	230/400V/60HZ	260	0,55	1600			
	460-480V/60HZ	300	0,59	1650			
280	230/400V/50HZ	200	0,5	1350	2415	85	78
	230/400V/60HZ	280	0,55	1500			
	460-480V/60HZ	270	0,6	1700			
315	230/400V/50HZ	350	0,75	1400	2820	110	81
	230/400V/60HZ	500	0,95	1550			
	460-480V/60HZ	400	1,2	1650			
355	230/400V/50HZ	280	1,4	960	3500	80	85
	230/400V/60HZ	350	1,1	1100			
	460-480V/60HZ	400	1,4	1050			

Auxiliary fans three phases

Motor size	Voltage	Output(W)	Current (A)	Speed (rpm)	Air Volume(m3/h)	Air Pressure (Pa)	Noise dB(A)
112	400/690V 50HZ	90	0.25/0.14	2600	229	80	67
132	400/690V 50HZ	60	0.21/0.12	1450	337	35	69
160	400/690V 50HZ	80	0.25/0.14	1400	609	40	72
180	400/690V 50HZ	90	0.27/0.15	1400	686	55	72
200	400/690V 50HZ	130	0.30/0.17	1400	1679	65	72
225	400/690V 50HZ	100	0.38/0.22	1450	1786	70	74
250	400/690V 50HZ	150	0.52/0.30	1420	1813	80	75
280	400/690V 50HZ	220	0.55/0.32	1400	2415	85	78
315	400/690V 50HZ	450	0.90/0.50	1300	2820	110	81
355	400/690V 50HZ	300	1.25/0.70	900	3500	80	85

Auxiliary fans three phases

Motor size	Voltage	Output(W)	Current (A)	Speed (rpm)	Air Volume(m3/h)	Air Pressure (Pa)	Noise dB(A)
71	415V/50HZ	40	0,1	2850	52	50	62
	415V/60HZ	35	0,08	3400			
80	415V/50HZ	40	0,1	2800	58	60	62
	415V/60HZ	35	0,08	3300			
90	415V/50HZ	40	0,1	2700	91	80	65
	415V/60HZ	40	0,08	3100			
100	415V/50HZ	95	0,24	2800	142	80	67
	415V/60HZ	80	0,17	3250			
112	415V/50HZ	100	0,24	2700	229	80	67
	415V/60HZ	105	0,19	3000			

26. AUXILIARY FANS

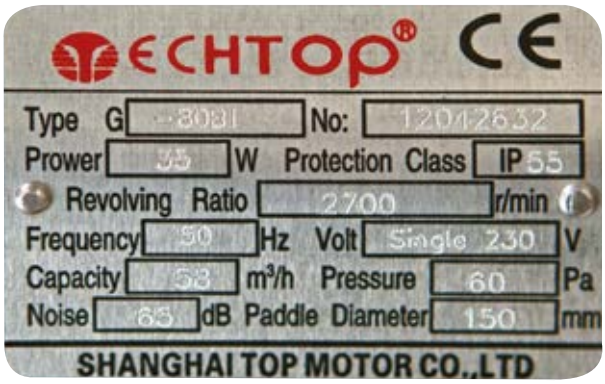

Auxilairy fans single phase

Motor size	Voltage	Output (W)	Current (A)	Speed (rpm)	Air Volume (m3/h)	Air Pressure (Pa)	Capacitor µF	Noise dB(A)
63	230V/50HZ	17	0,12	2800	45	40	1	62
71	230V/50HZ	18	0,13	2800	52	50	1	62
80	230V/50HZ	19	0,15	2800	58	60	1	62
90	230V/50HZ	20	0,14	2800	91	80	1	65
100	230V/50HZ	55	0,3	2700	142	80	2	67
112	230V/50HZ	65	0,37	2400	229	80	2	67
132	230V/50HZ	55	0,35	1400	337	35	2	69
160	230V/50HZ	70	0,4	1400	609	40	4	72
180	230V/50HZ	80	0,4	1200	686	55	4	72
200	230V/50HZ	85	0,4	1200	1679	65	4	72
225	230V/50HZ	150	0,7	1300	1786	70	8	74
250	230V/50HZ	195	0,98	1350	1813	80	10	75
280	230V/50HZ	170	0,95	1400	2415	85	10	78
315	230V/50HZ	500	2,5	1400	2820	110	12	81
355	230V/50HZ	500	2,6	950	3500	80	16	85

Auxilairy fans single phase

Motor size	Voltage	Output (W)	Current (A)	Speed (rpm)	Air Volume (m3/h)	Air Pressure (Pa)	Capacitor µF	Noise dB(A)
71	240V/50HZ	35	0,15	2800	52	50	1,2	62
80	240V/50HZ	35	0,15	2750	58	60	1,2	62
90	240V/50HZ	40	0,15	2550	91	80	1,2	65
100	240V/50HZ	75	0,36	2800	142	80	2	67
112	240V/50HZ	80	0,37	2600	229	80	2	67
112	230V/50HZ	65	0,37	2400	229	80	2	67

Motor size	Voltage	Output (W)	Current (A)	Speed (rpm)	Air Volume (m3/h)	Air Pressure (Pa)	Capacitor µF	Noise dB(A)
71	240V/60HZ	35	0,14	3300	52	50	1,2	62
80	240V/60HZ	35	0,14	3250	58	60	1,2	62
90	240V/60HZ	40	0,15	2900	91	80	1,2	65
100	240V/60HZ	75	0,35	3250	142	80	2	67
112	240V/60HZ	95	0,42	2900	229	80	2	67

SIMOTOP® GROUP

26. AUXILIARY FANS

All frame sizes can be supplied with cooling system IC 416 (forced ventilation) on request. In this case a proper fan is fitted inside the fan cover, suitably reinforced. Consequently the ventilation is independent on the rotational speed of the motor itself. This solution is particularly suitable for inverter supplied motors.

In the following table are listed the total lenghts L for motors equipped with auxiliary ventilation. If encoder is also fit on the motor, the total L dimension does not change.

L measure of standard motor + measure showed in the table below

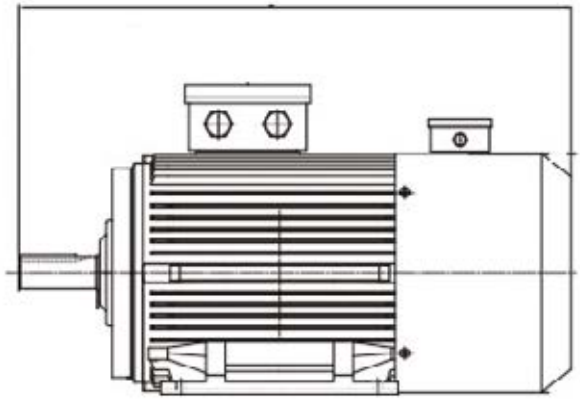

Type	Poles	MS Series mm	TA Series mm	TC Series mm
71	2,4,6,8	92	105	
80	2,4,6,8	94	94	
90S	2,4,6,8	99	99	
90L	2,4,6,8	99	99	
100	2,4,6,8	108	108	
112	2,4,6,8	95	95	
132S	2,4,6,8	104	104	70,5
132M	2,4,6,8	104	104	70,5
160M	2,4,6,8		145	91
160L	2,4,6,8		145	101
180M	2,4,6,8			67
180L	2,4,6,8			67
200L	2,4,6,8			58
225S	2,4,6,8			121
225M	2			121
225M	4,6,8			121
250M	2			116
250M	4,6,8			116
280S	2			114
280S	4,6,8			114
280M	2			114
280M	4,6,8			114
315S	2			95
315S	4,6,8			95
315M	2			95
315M	4,6,8			95
315L	2			95
315L	4,6,8			95
355M	2			95
355M	4,6,8			95
355L	2			95
355L	4,6,8			95

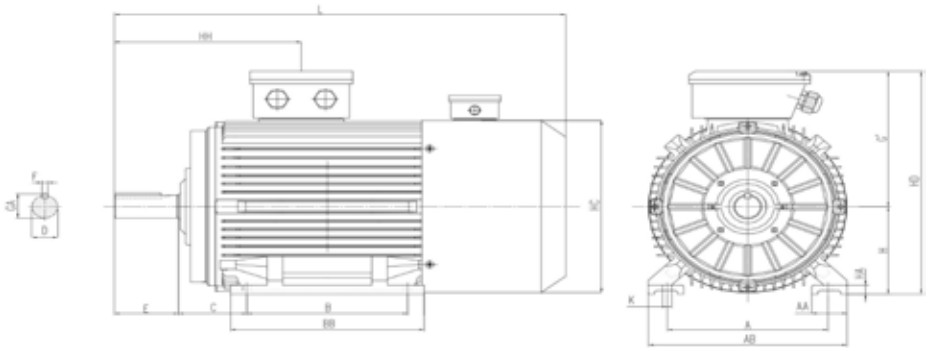

TA Series aluminum:

		Dimensions																	
TYPE	Poles	A	AA	AB	B	BB	C	G'	H	HA	HC	HD	HH	K	L	D	E	F	GA	Threaded hole
TA80	2,4,6,8	125	35	159	100	125	50	139	80	11	158	219	109	9	374	19	40	6	21.5	M6
TA90	2,4,6,8	140	37	175	100	130	56	150	90	13	176	240	119	9	411	24	50	8	27	M8
TA90L	2,4,6,8	140	37	175	125	155	56	150	90	13	176	240	119	9	436	24	50	8	27	M8
TA100	2,4,6,8	160	45	200	140	180	63	190	100	14	198	290	140	12	488	28	60	8	31	M10
TA112	2,4,6,8	190	45	224	140	180	70	202	112	14	222	314	147	12	500	28	60	8	31	M10
TA132S	2,4,6,8	216	44	264	140	190	89	222	132	16	262	354	166	12	571	38	80	8	41	M10
TA132M	2,4,6,8	216	44	264	178	228	89	222	132	16	262	354	166	12	609	38	80	10	41	M10

TC series cast iron:

		Dimensions																	
TYPE	Poles	A	AA	AB	B	BB	C	G'	H	HA	HC	HD	HH	K	L	D	E	F	GA	Threaded hole
132S	2.4 .6.8	216	46	255	140	190	89	200	132	16	259	332	168	12	537.5	38	80	10	41	M12
132M	2 .4 .6.8	216	46	255	178	228	89	200	132	16	259	332	168	12	575.5	38	80	10	41	M12
160M	2 .4 .6.8	254	60	314	2 10	262	108	242	160	17	313	402	282	15	696	42	110	12	45	M16
160L	2.4 .6.8	254	60	314	254	306	108	242	160	17	313	402	282	15	751	42	110	12	45	M16
180M	2 .4 .6.8	279	75	348	241	300	121	259	180	27	360	439	351	15	754	48	110	14	51 ,5	M16
180L	2.4.6.8	279	75	348	279	338	121	259	180	27	360	439	37 1	15	792	48	110	14	5 1,5	M16
200L	2.4.6.8	3 18	80	388	305	358	133	297	200	25	399	497	395	19	826	55	110	16	59	M20
225S	4.6.8	356	85	436	286	361	149	328	225	28	465	553	423	19	935	60	140	18	64	M20
225M	2	356	85	436	3 11	386	149	328	225	28	465	553	405	19	930	55	110	16	59	M20
225M	4.6.8	356	85	436	3 11	386	149	328	225	28	465	553	435	19	960	60	140	18	64	M20
250M	2	406	90	484	349	443	168	366	250	30	506	616	482	24	1034	60	140	18	64	M20
250M	4 .6 .8	406	90	484	349	443	168	366	250	30	506	616	482	24	1034	65	140	18	69	M20
280S	2	457	100	557	368	459	190	388	280	34	559	668	514	24	1098	65	140	18	69	M20
280S	4 .6 .8	457	100	557	368	459	190	388	280	34	559	668	514	24	1098	75	140	20	79 ,5	M20
280M	2	457	100	557	419	510	190	388	280	34	559	668	514	24	1149	65	140	18	69	M20
280M	4.6.8	457	100	557	419	510	190	388	280	34	559	668	514	24	1149	75	140	20	79,5	M20
315S	2	508	120	628	406	590	2 16	530	315	45	651	845	432	28	1300	65	140	18	58	M20
315S	4.6.8	508	120	628	406	590	216	530	315	45	651	845	462	28	1330	80	170	22	71	M20
315M	2	508	120	628	457	672	216	530	315	45	651	845	432	28	1460	65	140	18	58	M20
315M	4 .6.8	508	120	628	457	672	216	530	315	45	645	845	462	28	1480	80	170	22	71	M20
315L	2	508	120	628	508	672	216	530	315	45	651	845	432	28	1450	65	140	18	58	M20
315L	4 .6.8	508	120	628	508	672	216	530	315	45	651	845	462	28	1480	80	170	22	71	M20

27. PERMISSIBLE LOAD ON THE BEARINGS

The theoretical basic fatigue life for bearings is calculated according to the provisions of the ISO R 281-1 Standard.
Life of bearing is calculated assuming that motors are running under normal environmental conditions, without abnormal vibrations, without axial or radial loads beyond the ones mentioned in the following tables and with operating temperatures of the bearings ranging between -30°C and +85°C.
Lasting life calculated in this way is called basic life (L10h) expressed in hours of operation.
50% of bearings reaches a life equal to five times the basic life resulting from such calculation.
In the tables below are mentioned the maximum permitted axial and radial loads for a basic life (L10h), calculated according to the provisions of the ISO Standards, equal to 20.000 and 40.000 hours of operation.
Values of the radial loads are given both for loads applied to the shaft limit extension (Xmax) and in correspondence of the face on the shaft hub (X0).
Radial loads on the bearing change linearly with the position of the application point. Therefore for loads placed at a distance X on the shaft the maximum load that can be applied is given by the following expression:

$$Fra_X = \frac{C_{xo} - C_{x\max}}{X_{\max}} \times X + C_{x\max}$$

Where:
Fra_x = permitted radial load at point X
C_{xo} = permitted radial load at point X0
C_{Xmax} = permitted radial load at point Xmax
X_{max} = shaft extension
X = distance from the shaft limit extension to the load application point

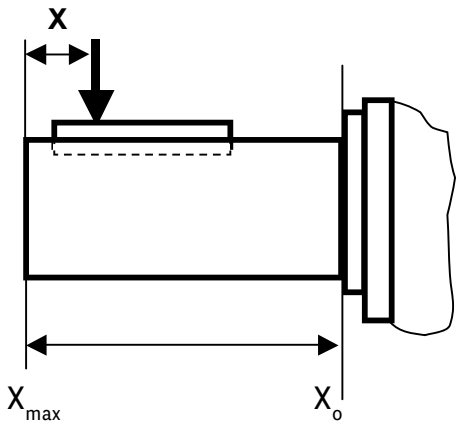

X increase when Fra_x moves from X_{max} to X_o, X is maximum when Fra_x is applied in X_o and $X=X_{ma}x$

To verify that the belt pull does not exceed the maximum value allowed the following formula can be used:

$$F = \frac{19100 \times P \times K}{n \times D}$$

F= radial force in Nm
P= power trasmitted in kW
n= numbers of revs. per minute
D= pulley diameter in meters
K= constant

Constant values K:

2	for flat pulley with tension roller
2,25	for sheaves with V belt
2,5-3	for flat belts without tension roller, or for heavy duty with any type of pulley

28. MAXIMUM RADIAL AND AXIAL LOADS PERMISSIBLE

MS, TA series mounting IM B3 (50Hz)

Poles	Frame size	Radial load (Nm)				Shaft length mm	Maximum Axial force (N)	
		(L10h) = 20000 hours		(L10h) = 40000 hours			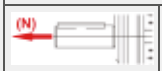	
		X_0	X_{max}	X_0	X_{max}			
2	63	450	390	324	281	23	380	190
	71	530	450	382	324	30	460	230
	80	720	590	519	425	40	620	310
	90	800	640	576	461	50	660	330
	100	1100	900	792	648	60	930	465
	112	1100	870	792	627	60	900	450
	132	1800	1400	1296	1008	80	1450	725
	160	3000	2350	2160	1692	110	2000	1000
	180	3000	2400	2160	1728	110	2000	950
	200	1390	350	1001	252	110	2650	710
4	63	570	490	411	353	23	510	255
	71	690	580	497	418	30	620	310
	80	920	750	663	540	40	850	425
	90	1000	810	720	584	50	890	445
	100	1350	1080	972	778	60	1200	600
	112	1300	1050	936	756	60	1170	585
	132	2100	1690	1512	1217	80	1850	925
	160	3600	2000	2592	1440	110	2500	1200
	180	3650	2500	2628	1800	110	2500	1300
	200	1390	950	1001	684	110	3350	850
6	63	630	540	454	389	23	600	300
	71	750	630	540	454	30	720	360
	80	1080	880	778	634	40	1030	515
	90	1130	920	814	663	50	1040	520
	100	1570	1260	1131	908	60	1430	715
	112	1500	1200	1080	864	60	1400	700
	132	2300	1900	1656	1368	80	2150	1075
	160	4200	2000	3024	1440	110	2900	1450
	180	4300	2500	3096	1800	110	2900	1500
	200	1390	950	1001	684	110	3850	850
8	63	770	660	555	476	23	700	350
	71	900	770	648	555	30	840	420
	80	1300	1040	936	749	40	1200	600
	90	1300	1050	936	756	50	1220	610
	100	1900	1550	1368	1116	60	1950	975
	112	1900	1550	1368	1116	60	1920	960
	132	2800	2250	2016	1620	80	2540	1270
	160	4500	2000	3240	1440	110	3300	1650
	180	4900	2500	3528	1800	110	3200	1700
	200	1390	950	1001	684	110	4300	850

28. MAXIMUM RADIAL AND AXIAL LOADS PERMISSIBLE

MS, TA series mounting IM V1 (50Hz)

Poles	Frame size	Maximum Axial force (N) in downwards direction		Maximum Axial force (N) in upwards direction	
		(L10h) = 20000 hours	(L10h) = 40000 hours	(L10h) = 20000 hours	(L10h) = 40000 hours
2	63	225	135	400	240
	71	300	180	480	288
	80	450	270	670	402
	90	500	300	720	432
	100	650	390	1000	600
	112	620	372	1000	600
	132	980	588	1100	660
	160	2000	1200	1970	1182
	180	2130	1278	1800	1080
	200	3200	1920	1650	990
4	63	390	234	540	324
	71	400	240	650	390
	80	690	414	900	540
	90	730	438	970	582
	100	900	540	1300	780
	112	860	516	1300	780
	132	1320	792	1500	900
	160	2040	1224	1660	996
	180	1990	1194	1820	1092
	200	2750	1650	1300	780
6	63	460	276	610	366
	71	470	282	750	450
	80	860	516	1060	636
	90	870	522	1150	690
	100	1100	660	1550	930
	112	1050	630	1550	930
	132	1700	1020	2500	1500
	160	2470	1482	1880	1128
	180	2340	1404	2050	1230
	200	3140	1884	1560	936
8	63	550	330	610	366
	71	560	336	750	450
	80	1050	630	1060	636
	90	1060	636	1150	690
	100	1400	840	1600	960
	112	1500	900	1600	960
	132	2000	1200	1900	1140
	160	2930	1758	2020	1212
	180	2680	1608	2230	1338
	200	3660	2196	1380	828

TC series mounting IM B3 (50Hz)

Poles	Frame size	Radial force (N)				Shaft length mm	Maximum Axial force (N)	
		(L10h) = 20000 hours		(L10h) = 40000 hours			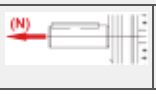	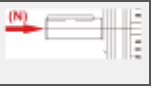
		X_0	X_{max}	X_0	X_{max}			
2	132S1-2	2300	1800	1656	1296	80	1900	890
	132S2-2	2300	1800	1656	1296	80	1900	890
	160M1-2	3000	2400	2160	1728	110	2000	1000
	160M2-2	3000	2300	2160	1656	110	2000	1000
	160L-2	3000	2400	2160	1728	110	2000	1000
	180M-2	3000	2400	2160	1728	110	2000	1050
	200L1-2	1390	950	1000	684	110	2650	1100
	200L2-2	4600	3800	3312	2736	110	2650	1100
	225M-2	4550	3800	3276	2736	110	3000	1750
	250M-2	3260	2000	2347	1440	140	3400	1700
	280S-2	4600	3750	3312	2700	140	3250	1460
	280M-2	4600	3750	3312	2700	140	3250	1460
	315S-2	6100	3530	4392	2541	140	4000	1800
	315M-2	6100	3530	4392	2541	140	4000	1800
	315L1-2	6330	4000	4557	2880	140	3240	1458
	315L2-2	6330	4000	4557	2880	140	3240	1458
4	132S-4	2900	2300	2088	1656	80	2100	1050
	132M-4	2800	2300	2016	1656	80	2100	1250
	160M-4	3600	2000	2592	1440	110	2500	1200
	160L-4	3600	2000	2592	1440	110	2500	1200
	180M-4	3650	2500	2628	1800	110	2500	1300
	180L-4	3650	2500	2628	1800	110	2500	1300
	200L-4	1390	950	1000	684	110	3350	1100
	225S-4	5400	3800	3888	2736	140	3700	1100
	225M-4	5400	3800	3888	2736	140	3700	2100
	250M-4	3260	2000	2347	1440	140	4200	2050
	280S-4	6000	3500	4320	2520	140	4050	1820
	280M-4	6000	3500	4320	2520	140	4050	1820
	315S-4	21300	8700	15336	6264	170	4850	2200
	315M-4	21300	8700	15336	6264	170	4850	2200
	315L1-4	16000	9500	11520	6840	170	3930	1768
	315L2-4	16000	9500	11520	6840	170	3930	1768

28. MAXIMUM RADIAL AND AXIAL LOAD PERMISSIBLE

TC series mounting IM B3 (50Hz)

Poles	Frame size	Radial force (N)				Shaft length mm	Maximum Axial force (N)	
		(L10h) = 20000 hours		(L10h) = 40000 hours			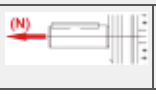	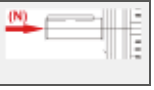
		X_0	X_{max}	X_0	X_{max}			
6	132M2-6	3200	2600	2304	1872	80	2600	1300
	160M-6	4300	2000	3096	1440	110	2900	1450
	160L-6	4300	2000	3096	1440	110	2900	1450
	180L-6	4300	2500	3096	1800	110	2900	1500
	200L1-6	1390	950	1001	684	110	3850	1100
	200L2-6	1390	950	1001	684	110	3850	1100
	225M-6	6300	3800	4536	2736	140	4300	2500
	250M-6	3260	2000	2348	1440	140	4800	2000
	280S-6	6000	3500	4320	2520	140	4700	3100
	280M-6	6000	3500	4320	2520	140	4700	3100
	315S-6	22000	8400	15840	6048	170	5600	2464
	315M-6	22000	8400	15840	6048	170	5600	2464
	315L1-6	16000	6500	11520	4680	170	4500	1980
	315L2-6	16000	6500	11520	4680	170	4500	1980
8	160M2-8	4500	2000	3240	1440	110	3300	1650
	160L-8	4500	2000	3240	1440	110	3300	1650
	180L-8	4900	2500	3528	1800	110	3200	1700
	200L-8	1390	950	1001	684	110	4300	1100
	225S-8	7000	3800	5040	2736	140	4750	2750
	225M-8	7000	3800	5040	2736	140	4750	2750
	250M-8	3260	2000	2348	1440	140	5400	2120
	280S-8	6000	3500	4320	2520	140	5200	3250
	280M-8	6000	3500	4320	2520	140	5200	3250
	315S-8	19800	8250	14256	5940	170	6200	2728
	315M-8	19800	8250	14256	5940	170	6200	2728
	315L1-8	15700	6350	11304	4572	170	6200	2728
	315L2-8	15700	6350	11304	4572	170	6200	2728

SIMOTOP® GROUP

TC series mounting IM V1 (50Hz)

Poles	Frame size	Maximum Axial force (N) in downwards direction		Maximum Axial force (N) in upwards direction	
		(L10h) = 20000 hours	(L10h) = 40000 hours	(L10h) = 20000 hours	(L10h) = 40000 hours
2	132S1-2	1600	960	1900	1140
	132S2-2	1600	960	1900	1140
	160M1-2	1730	1038	1270	762
	160M2-2	1730	1038	1270	762
	160L-2	1730	1038	1270	762
	180M-2	1650	990	1300	780
	200L1-2	2190	1314	1170	702
	200L2-2	2190	1314	1170	702
	225M-2	2380	1428	2370	1422
	250M-2	2700	1620	2410	1446
	280S-2	2130	1278	4370	2622
	280M-2	2130	1278	4370	2622
	315S-2	2560	1536	5800	3480
	315M-2	2560	1536	5800	3480
	315L1-2	2900	1740	5900	3540
	315L2-2	2900	1740	5900	3540
4	132S-4	1600	960	1520	912
	132M-4	1600	960	1520	912
	160M-4	2040	1224	1660	996
	160L-4	2040	1224	1660	996
	180M-4	2000	1200	1820	1092
	180L-4	2000	1200	1820	1092
	200L-4	2750	1650	1310	786
	225S-4	2780	1668	3050	1830
	225M-4	2780	1668	3050	1830
	250M-4	3160	1896	3000	1800
	280S-4	2430	1458	5600	3360
	280M-4	2430	1458	5600	3360
	315S-4	1950	1170	7750	4650
	315M-4	1950	1170	7750	4650
	315L1-4	1270	762	7460	4476
	315L2-4	1270	762	7460	4476

28. MAXIMUM RADIAL AND AXIAL LOAD PERMISSIBLE

TC series mounting IM V1 (50Hz)

Poles	Frame size	Maximum Axial force (N) in downwards direction		Maximum Axial force (N) in upwards direction	
		(L10h) = 20000 hours	(L10h) = 40000 hours	(L10h) = 20000 hours	(L10h) = 40000 hours
6	132M2-6	2300	1495	1650	1073
	160M-6	2450	1593	1880	1222
	160L-6	2450	1593	1880	1222
	180L-6	2320	1508	2060	1339
	200L1-6	3100	2015	1450	943
	200L2-6	3100	2015	1450	943
	225M-6	3300	2145	3500	2275
	250M-6	3600	2340	3250	2113
	280S-6	3100	2015	6300	4095
	280M-6	3100	2015	6300	4095
	315S-6	1150	748	4100	2665
	315M-6	1150	748	4100	2665
	315L1-6	900	585	4300	2795
	315L2-6	900	585	4300	2795
8	160M2-8	2900	1885	2020	1313
	160L-8	2900	1885	2020	1313
	180L-8	2700	1755	2240	1456
	200L-8	3700	2405	1650	1073
	225S-8	3850	2503	3700	2405
	225M-8	3850	2503	3700	2405
	250M-8	4300	2795	9600	6240
	280S-8	3650	2373	6700	4355
	280M-8	3650	2373	6700	4355
	315S-8	1800	1170	4250	2763
	315M-8	2800	1820	4250	2763
	315L1-8	1800	1170	4780	3107
	315L2-8	1300	845	4780	3107

SIMOTOP® GROUP

TC series mounting IM B3 (50Hz)

Poles	Frame size	Radial force (N)				Shaft length mm	Maximum Axial force (N)	
		(L10h) = 20000 hours		(L10h) = 40000 hours			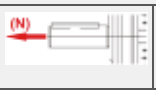	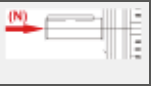
		X_0	X_{max}	X_0	X_{max}			
2	355	4300	2200	3096	1584	140	2000	2000
4	355	9000	6500	6480	4680	210	6000	6000
6	355	9800	3400	7056	2448	210	7000	7000
8	355	9800	3000	7056	2160	210	8000	8000

TC series mounting IM V1 (50Hz)

Poles	Frame size	Maximum Axial force (N) in downwards direction		Maximum Axial force (N) in upwards direction	
		(L10h) = 20000 hours	(L10h) = 40000 hours	(L10h) = 20000 hours	(L10h) = 40000 hours
2	355	3690	2325	200	126
4	355	1880	1185	14100	8883
6	355	400	252	15800	9954
8	355	400	252	17100	10773

SIMOTOP® GROUP

electric motors
SIMOTOP GROUP

MS Series

ELECTRICAL AND MECHANICAL DATA

ALUMINUM HOUSING

29. MS SERIES - Three-Phase Asynchronous single speed motors

Electrical data (50Hz) Efficiency IE1 - 2 poles

Type	Power (kW)	Current (A)			Current (A)			Current (A)			rpm	Eff. (%)	Power factor (Cosφ)	Cs/ Cn	Cmax/ Cn	Cn (Nm)	Cmin/ Cn	Is/In	dB(A)	Weight (Kg)*	PD² Kgm²
		220V	380V	660V	230V	400V	690V	240V	415V	720V											
MS561-2	0,09	0,73	0,42	0,25	0.7	0.4	0.23	0,67	0,39	0,22	2670	57	0,65	0,2	2,4	0,502	2	6	58	2,80	0,000102
MS562-2	0,12	0,80	0,46	0,27	0.76	0.44	0.25	0,73	0,42	0,24	2730	62	0,69	2,2	2,4	0,534	2	6	58	3,20	0,000128
MS563-2	0,18	1,07	0,62	0,36	1.02	0.59	0.34	0,99	0,57	0,33	2750	65	0,72	2,2	2,4	0,642	1,6	6	59	3,50	0,000142
MS631-2	0,18	1,00	0,58	0,33	0.95	0,55	0.32	0,92	0,53	0,31	2710	63	0,75	2,2	2,4	0,641	1,6	6	61	4,00	0,000150
MS632-2	0,25	1,29	0,75	0,43	1.23	0.71	0.41	1,19	0,69	0,40	2710	65	0,78	2,2	2,4	0,884	1,6	6	61	4,40	0,000171
MS633-2	0,37	1,92	1,11	0,64	1.82	1.05	0.61	1,76	1,02	0,59	2710	65	0,78	2,2	2,4	1,261	1,6	6	62	4,90	0,000203
MS711-2	0,37	1,76	1,02	0,59	1.67	0.97	0.56	1,61	0,93	0,54	2730	70	0,79	2,2	2,4	1,262	1,6	6	64	5,60	0,000314
MS712-2	0,55	2,57	1,49	0,86	2.45	1.42	0.82	2,36	1,36	0,79	2760	71	0,79	2,2	2,4	1,869	1,6	6	64	6,10	0,000384
MS713-2	0,75	3,33	1,93	1,11	3.18	1.83	1.06	3,06	1,77	1,02	2730	72	0,82	2,2	2,4	2,54	1,5	6	65	7,00	0,000476
MS801-2	0,75	3,25	1,88	1,08	3.06	1.77	1.02	2,98	1,72	0,99	2770	73	0,83	2,2	2,4	2,54	1,5	6	67	9,10	0,000880
MS802-2	1,1	4,56	2,64	1,52	4.35	2.51	1.45	4,18	2,42	1,39	2770	76,2	0,83	2,2	2,4	3,72	1,5	6	67	10,20	0,001072
MS803-2	1,5	6,04	3,50	2,01	5.87	3.32	1.92	5,54	3,20	1,85	2800	78,5	0,83	2,2	2,4	5,04	1,5	6	70	11,70	0,001329
MS90S-2	1,5	5,97	3,46	1,99	5.76	3.28	1.90	5,47	3,16	1,82	2840	78,5	0,84	2,2	2,4	5,04	1,5	6	72	12,00	0,001579
MS90L1-2	2,2	8,39	4,85	2,80	8.0	4.61	2.66	7,69	4,45	2,56	2840	81	0,85	2,2	2,4	7,4	1,4	6	72	15,00	0,002123
MS90L2-2	3	11,08	6,42	3,69	10.56	6.10	3.52	10,16	5,88	3,39	2840	82,6	0,86	2,2	2,4	10,1	1,4	6	74	18,50	0,002669
MS100L1-2	3	10,96	6,34	3,65	10.44	6.03	3.48	10,04	5,81	3,35	2840	82,6	0,87	2,2	2,3	10,1	1,4	7	76	22,30	0,003475
MS100L2-2	4	14,33	8,30	4,78	13.65	7.88	4.55	13,14	7,60	4,38	2850	84,2	0,87	2,2	2,3	13,4	1,4	7,5	77	25,20	0,004247
MS112M-2	4	14,33	8,30	4,78	13.65	7.88	4.55	13,14	7,60	4,38	2880	84,2	0,87	2,2	2,3	13,4	1,4	7,5	77	26,70	0,005845
MS112L-2	5,5	19,14	11,08	6,38	18.23	10.53	6.08	17,54	10,15	5,85	2880	85,7	0,88	2,2	2,3	18,2	1,2	7,5	78	30,20	0,007429
MS132S1-2	5,5	19,14	11,08	6,38	18.23	10.53	6.08	17,54	10,15	5,85	2900	85,7	0,88	2	2,2	18,1	1,2	7,5	80	38,50	0,011224
MS132S2-2	7,5	25,71	14,88	8,57	24.49	14.14	8.16	23,57	13,63	7,86	2920	87	0,88	2	2,2	24,7	1,2	7,5	80	42,20	0,013838
MS132M1-2	10	30,83	17,85	10,28	29.87	17.25	9.96	28,26	16,34	9,42	2930	88	0,89	2	2,2	29,5	1,2	7,5	81	51,40	0,016551
MS132M2-2	11	36,28	21,01	12,09	34.57	19.96	11.52	33,26	19,23	11,09	2930	88,4	0,9	2	2,2	36,0	1,2	7,5	83	58,80	0,018641
MS160M1-2	11	36,28	21,01	12,09	34.57	19.96	11.52	33,26	19,23	11,09	2940	88,4	0,9	2	2,2	36,1	1,2	7,5	86	75,00	0,041164
MS160M2-2	15	48,39	28,01	16,13	46.09	26.61	15.36	44,35	25,65	14,78	2940	89,4	0,91	2	2,2	48,9	1,2	7,5	86	88,00	0,048985
MS160L-2	18,5	59,28	34,32	19,76	56.47	32.6	18.82	54,34	31,43	18,11	2940	90	0,91	2	2,2	60,1	1,1	7,5	86	99,00	0,059935
MS180M-2	22	71,3	41,3	23,8	68,2	39.2	22.6	65,3	37,8	21,8	2950	90	0,9	2	2,2	71,2	1,2	7,5	91	121,0	0,090185
MS200L1-2	30	96,0	55,6	32,1	91,8	52.8	30.5	88,0	50,9	29,4	2950	91,2	0,9	2	2,2	97,0	1,2	7,5	94	144,0	0,114999
MS200L2-2	37	117	67,9	39,2	112	64.5	37.2	108	62,2	35,9	2940	92	0,9	2	2,2	119	1,2	7,5	94	151,0	0,136738

(*) Weights are indicative may vary by changing the materials used, Simotop Group Spa reserves the right to modify this data at any time and without notice.

Electrical data (50Hz) Efficiency IE1 - 4 poles

Type	Power (kW)	Current (A)			Current (A)			Current (A)			rpm	Eff. (%)	Power factor (Cosφ)	Cs/ Cn	Cmax/ Cn	Cn (Nm)	Cmin/ Cn	Is/In	dB(A)	Weight (Kg)*	PD^2 Kgm^2
		220V	380V	660V	230V	400V	690V	240V	415V	720V											
MS561-4	0,06	0,55	0,32	0,18	0.52	0.30	0.17	0,50	0,29	0,17	1320	48,5	0,59	2,3	2,4	0,478	2	6	50	3,00	0,000190
MS562-4	0,09	0,77	0,45	0,26	0.74	0.43	0.25	0,71	0,41	0,24	1320	50	0,61	2,3	2,4	0,498	2	6	50	3,30	0,000240
MS631-4	0,12	0,86	0,50	0,29	0.82	0.47	0.27	0,79	0,46	0,26	1350	57	0,64	2,2	2,4	0,93	2	6	52	3,90	0,000273
MS632-4	0,18	1,23	0,71	0,41	1.17	0.68	0.39	1,13	0,65	0,38	1350	59	0,65	2,2	2,4	1,28	2	6	52	4,30	0,000338
MS633-4	0,25	1,66	0,96	0,55	1.58	0.91	0.53	1,52	0,88	0,51	1350	60	0,66	2,2	2,4	1,77	2	6	54	4,80	0,000408
MS711-4	0,25	1,52	0,88	0,51	1.45	0.84	0.48	1,39	0,81	0,46	1350	60	0,72	2,2	2,4	1,78	1,7	6	55	5,40	0,000561
MS712-4	0,37	2,02	1,17	0,67	1.92	1.11	0.64	1,85	1,07	0,62	1370	65	0,74	2,2	2,4	2,62	1,7	6	55	6,20	0,000714
MS713-4	0,55	2,92	1,69	0,97	2.78	1.60	0.93	2,67	1,55	0,89	1380	66	0,75	2,2	2,4	3,86	1,7	6	57	7,30	0,000920
MS801-4	0,55	2,87	1,66	0,96	2.74	1.58	0.91	2,63	1,52	0,88	1370	67	0,75	2,2	2,4	3,87	1,8	6	58	9,00	0,001350
MS802-4	0,75	3,50	2,03	1,17	3.34	1.93	1.11	3,21	1,86	1,07	1380	72	0,78	2,2	2,4	5,27	1,9	6	58	10,00	0,001793
MS803-4	1,1	4,86	2,81	1,62	4.63	2.67	1.54	4,45	2,57	1,48	1390	76,2	0,78	2,2	2,4	7,61	1,6	6	60	12,30	0,002236
MS90S-4	1,1	4,80	2,78	1,60	4.57	2.64	1.52	4,40	2,54	1,47	1400	76,2	0,79	2,2	2,4	7,60	1,9	6	61	12,10	0,002443
MS90L1-4	1,5	6,27	3,63	2,09	5.97	3.45	1.99	5,75	3,32	1,92	1400	78,5	0,8	2,2	2,4	10,38	1,9	6	61	14,60	0,003152
MS90L2-4	2,2	8,91	5,16	2,97	8.45	4.90	2.83	8,17	4,72	2,72	1400	81	0,8	2,2	2,4	14,90	1,9	7	63	18,30	0,004002
MS100L1-4	2,2	8,80	5,09	2,93	8.38	4.84	2.79	8,07	4,66	2,69	1420	81	0,81	2,2	2,3	14,90	1,5	7	64	21,00	0,005977
MS100L2-4	3	11,77	6,81	3,92	11.21	6.47	3.74	10,79	6,24	3,60	1420	82,6	0,81	2,2	2,3	20,32	1,5	7	64	24,70	0,007591
MS100L3-4	4	15,20	8,80	5,07	14.18	8.36	4.83	13,94	8,06	4,65	1430	84,2	0,82	2,2	2,3	26,93	1,5	7	65	29,00	0,009626
MS112M-4	4	15,02	8,70	5,01	14.31	8.26	4.77	13,77	7,96	4,59	1430	84,2	0,83	2,2	2,2	26,90	1,5	7	65	30,50	0,012079
MS112L-4	5,5	20,29	11,75	6,76	19.33	11.16	6.44	18,60	10,76	6,20	1440	85,7	0,83	2,2	2,2	36,74	1,4	7	68	34,80	0,014229
MS 132S-4	5,5	20,05	11,61	6,68	19.1	11.03	6.37	18,38	10,63	6,13	1450	85,7	0,84	2,20	2,20	36,72	1,4	7	71	40,40	0,031235
MS132M-4	7,5	26,62	15,41	8,87	25.35	14.64	8.45	24,40	14,11	8,13	1450	87	0,85	2,2	2,2	50,12	1,4	7	71	49,60	0,033131
MS132L1-4	10	35,08	20,31	11,69	33.42	19.3	11.14	32,16	18,60	10,72	1460	88	0,85	2,2	2,2	60,13	1,4	7,5	74	58,50	0,039339
MS132L2-4	11	37,97	21,98	12,66	36.17	20.88	12.06	34,81	20,13	11,60	1460	88,4	0,86	2,2	2,2	71,74	1,4	7,5	74	64,00	0,045478
MS160M-4	11	37,54	21,73	12,51	35.76	20.64	11.92	34,41	19,90	11,47	1460	88,4	0,87	2,2	2,2	71,78	1,4	7	75	78,00	0,077369
MS160L1-4	15	51,18	29,63	17,06	48.76	28.15	16.25	46,92	27,13	15,64	1460	88,4	0,87	2,2	2,2	97,83	1,4	7,5	75	98,00	0,101156
MS160L2-4	18,5	62,40	36,00	20.8	60,60	35,00	20,20	59,40	34,30	29,80	1460	88,7	0,86	2,2	2,2	120	1,4	7,5	78	97,50	0,127587
MS180M-4	18,5	62,40	36,10	20,80	59.7	34.3	19.8	57,20	33,10	19,10	1470	90,5	0,86	2,2	2,2	143	1,4	7,5	80	118,0	0,155064
MS180L-4	22	73,80	42,70	24.7	70.6	40.6	23.4	67,70	39,10	22,60	1470	91	0,86	2,2	2,2	143	1,4	7,5	80	128,0	0,173293
MS200L-4	30	99,50	57,60	33,20	95.1	54.7	31.6	91,20	52,70	30,40	1470	92	0,86	2,2	2,2	195	1,4	7,5	83	153,0	0,224084

(*) Weights are indicative may vary by changing the materials used, Simotop Group Spa reserves the right to modify this data at any time and without notice.

29. MS SERIES - Three-Phase Asynchronous single speed motors

Electrical data (50Hz) Efficiency IE1 - 6 poles

Type	Power (kW)	Current (A)			Current (A)			Current (A)			rpm	Eff. (%)	Power factor (Cosφ)	Cs/ Cn	Cmax/ Cn	Cn (Nm)	Cmin/ Cn	Is/In	dB(A)	Weight (Kg)*	PD² Kgm²
		220V	380V	660V	230V	400V	690V	240V	415V	720V											
MS631-6	0,09	0,92	0,53	0,31	0.88	0.51	0.29	0,85	0,49	0,28	840	42	0,61	2	2	0,98	1,5	3,5	50	4,20	0,000418
MS632-6	0,12	1,13	0,65	0,38	1.08	0.62	0.36	1,03	0,60	0,34	850	45	0,62	2	2	1,18	1,5	3,5	50	4,80	0,000517
MS711-6	0,18	1,28	0,74	0,43	1.22	0.70	0.41	1,17	0,68	0,39	880	56	0,66	1,6	1,7	1,93	1,5	4	52	6,00	0,000841
MS712-6	0,25	1,59	0,92	0,53	1.51	0.87	0.50	1,46	0,84	0,49	900	59	0,7	2,1	2,2	2,36	1,5	4	52	6,50	0,000965
MS713-6	0,37	2,36	1,36	0,79	2.2	1.27	0.73	2,18	1,26	0,73	880	61	0,67	2	2,1	3,93	1,5	4	54	7,20	0,001151
MS801-6	0,37	2,24	1,30	0,75	2.13	1.23	0.71	2,05	1,19	0,68	900	62	0,7	1,9	1,9	3,90	1,5	4	56	8,20	0,001560
MS802-6	0,55	2,99	1,73	1,00	2.85	1.65	0.95	2,74	1,59	0,91	900	67	0,72	2	2,3	5,84	1,5	4	56	9,90	0,002098
MS803-6	0,75	4,02	2,33	1,34	3.83	2.21	1.28	3,69	2,13	1,23	900	68	0,72	2	2,3	7,88	1,5	4	58	11,30	0,002635
MS90S-6	0,75	3,96	2,29	1,32	3.77	2.18	1.26	3,63	2,10	1,21	920	69	0,72	2,2	2,2	7,83	1,5	5,5	59	11,70	0,003061
MS90L1-6	1,1	5,49	3,18	1,83	5.23	3.02	1.74	5,03	2,91	1,68	925	72	0,73	2,2	2,2	11,54	1,3	5,5	59	15,10	0,004067
MS90L2-6	1,5	7,09	4,11	2,36	6,76	3,90	2,25	6,50	3,76	2,17	925	74	0,75	2,2	2,2	15,64	1,3	5,5	60	15,50	0,005147
MS100L1-6	1,5	7,00	4,05	2,33	6.67	3.85	2.22	6,42	3,71	2,14	945	74	0,76	2,2	2,2	15,62	1,3	6	61	19,1	0,007913
MS100L2-6	2,2	9,87	5,71	3,29	9.40	5.43	3.13	9,04	5,23	3,01	950	77	0,76	2,2	2,2	22,31	1,3	6	63	22,80	0,011194
MS112M-6	2,2	9,74	5,64	3,25	9.28	5.36	3.09	8,93	5,16	2,98	955	78	0,76	2,2	2,2	22,34	1,3	6	64	25,40	0,013777
MS112L-6	3	13,10	7,54	4,37	12	6.9	4	11,54	6,60	4,01	955	79	0,76	2,2	2,2	30,21	1,3	6	64	30,00	0,018246
MS132S-6	3	13,11	7,59	4,37	12.49	7.21	4.16	12,02	6,95	4,01	960	79	0,76	2	2	30,18	1,3	6,5	64	36,10	0,029932
MS132M1-6	4	17,16	9,93	5,72	16.35	9.44	5.45	15,73	9,10	5,24	960	80,5	0,76	2	2	40,21	1,3	6,5	68	45,00	0,037337
MS132M2-6	5,5	22,58	13,08	7,53	21.51	12.42	7.17	20,70	11,97	6,90	960	83	0,77	2	2	55,32	1,3	6,5	68	55,50	0,049025
MS132L-6	7,5	30,07	17,41	10,02	28.65	16.54	9.55	27,57	15,94	9,19	960	85	0,77	2	2	74,60	1,3	6,5	68	60,00	0,060782
MS160M-6	7,5	28,61	16,56	9,54	27.25	15.73	9.08	26,22	15,17	8,74	960	86	0,8	2	2,2	74,58	1,5	6,5	68	72,0	0,084476
MS160L-6	11	41,76	24,18	13,92	39.78	22.97	13.26	38,28	22,14	12,76	960	87,5	0,79	2	2,2	109,43	1,7	6,5	73	92,0	0,118152
MS180L-6	15,0	54,6	31,6	18,2	52,2	30,0	17,3	50,1	28,9	16,68	970	89	0,81	2	2,2	147,73	1,3	6,5	79	124,0	0,254063
MS200L1-6	18,5	66,6	38,6	22,2	63,7	36,6	21,1	61,0	35,3	20,35	975	90	0,81	2	2,2	181,23	1,3	6,5	82	141,0	0,303941
MS200L2-6	22,0	77,3	44,7	25,8	73,9	42,5	24,5	70,8	41,0	23,62	975	90	0,83	2	2,2	215,21	1,3	6,5	82	152,0	0,353160

(*) Weights are indicative may vary by changing the materials used, Simotop Group Spa reserves the right to modify this data at any time and without notice.

Electrical data (50Hz) - 8 poles

Type	Power (kW)	Current (A)			Current (A)			Current (A)			rpm	Eff. (%)	Power factor (Cosφ)	Cs/ Cn	Cmax/ Cn	Cn (Nm)	Cmin/ Cn	Is/In	dB(A)	Weight (Kg)*	PD^2 Kgm^2
		220V	380V	660V	230V	400V	690V	240V	415V	720V											
MS711-8	0,09	0,98	0,57	0,33	0.94	0.54	0.28	0,90	0,52	0,30	670	43,1	0,56	1,5	1,7	1,05	2,3	3	50	6,00	0,000717
MS712-8	0,12	1,15	0,66	0,38	1.1	0.63	0.33	1,05	0,61	0,35	670	49,5	0,56	1,6	1,7	1,63	2,6	2,7	50	6,80	0,000841
MS801-8	0,18	1,52	0,88	0,51	1.45	0.84	0.48	1,39	0,80	0,46	680	51	0,61	1,5	1,7	2,60	1,3	2,8	52	9,90	0,002098
MS802-8	0,25	1,92	1,11	0,64	1.83	1.06	0.61	1,76	1,02	0,59	680	56	0,61	1,6	2	3,60	1,3	2,7	52	10,90	0,002500
MS90S-8	0,37	2,45	1,42	0,82	2.33	1.35	0.78	2,24	1,30	0,75	680	63	0,63	1,6	1,8	5,22	1,3	2,8	56	14,80	0,003061
MS90L-8	0,55	3,36	1,95	1,12	3.21	1.85	1.07	3,08	1,78	1,03	680	66	0,65	1,6	1,8	7,63	1,3	3	56	17,20	0,004067
MS100L1-8	0,75	4,45	2,58	1,48	4.24	2.45	1.41	4,08	2,36	1,36	710	66	0,67	1,7	2,1	10,42	1,3	3,5	59	17,50	0,006043
MS100L2-8	1,1	5,81	3,36	1,94	5.54	3.20	1.85	5,33	3,08	1,78	710	72	0,69	1,7	2,1	15,18	1,2	3,5	59	19,70	0,007503
MS112M-8	1,5	7,82	4,53	2,61	7.45	4.30	2.48	7,17	4,15	2,39	710	74	0,68	1,8	2,1	20,63	1,2	4,2	61	25,60	0,013491
MS132S-8	2,2	10,84	6,28	3,61	10.33	5.96	3.44	9,94	5,75	3,31	720	75	0,71	2	2	29,82	1,2	5,5	64	35,50	0,028992
MS132M-8	3	14,01	8,11	4,67	13.34	7.70	4.45	12,84	7,43	4,28	720	77	0,73	2	2	42,35	1,2	5,5	64	45,00	0,038042
MS160M1-8	4	17,97	10,41	5,99	17.12	9.89	5.71	16,48	9,53	5,49	730	80	0,73	1,9	2,1	53,81	1,2	6	68	60,00	0,067231
MS160M2-8	5,5	23,36	13,52	7,79	22.25	12.85	7.42	21,41	12,38	7,14	720	83,5	0,74	2	2,2	73,27	1,2	6	68	72,00	0,090636
MS160L-8	7,5	30,87	17,87	10,29	29.41	17.0	9.8	28,30	16,37	9,43	720	85	0,75	1,9	2,2	100,65	1,2	6	68	92,00	0,124073
MS180L-8	11	45,2	26,2	15,1	43,6	25,1	14,5	41,5	24,0	13,8	715	87,4	0,73	1,9	2,2	144,2	1,2	6	78	124,0	0,261094
MS200L-8	15	58,9	34,1	19,6	56,3	32,4	18,7	54,0	31,2	18,0	725	88,0	0,76	1,9	2,2	194,65	1,2	6	80	154,0	0,339098

(*) Weights are indicative may vary by changing the materials used, Simotop Group Spa reserves the right to modify this data at any time and without notice.

SIMOTOP® GROUP

29. MS SERIES – Three-Phase Asynchronous single speed motors

Electrical data (50Hz) Efficiency IE2 - 2 poles

Type	Power (kW)	Current (A)			Current (A)			Current (A)			rpm	Eff. (%)	Power factor (Cosφ)	Cs/ Cn	Cmax/ Cn	Cn (Nm)	Cmin/ Cn	Is/In	dB(A)	Weight (Kg)*	PD² Kgm²
		220V	380V	660V	230V	400V	690V	240V	415V	720V											
MS2 801-2	0,75	3,15	1,82	1,05	2,99	1,73	1,00	2,88	1,66	0,96	2840	77,4	0,81	3,3	3,5	2,49	2,7	6,9	67	8,9	0,000852
MS2 802-2	1,1	4,43	2,56	1,48	4,21	2,43	1,40	4,06	2,34	1,35	2860	79,6	0,82	3,5	3,7	3,53	2,8	7,2	67	10,57	0,001109
MS2 90S-2	1,5	5,85	3,38	1,95	5,56	3,21	1,85	5,36	3,09	1,79	2860	81,3	0,83	4,5	3,5	5,09	2,7	8,2	72	13,2	0,001430
MS2 90L1-2	2,2	8,38	4,84	2,79	7,96	4,60	2,66	7,68	4,43	2,56	2870	83,2	0,83	4,5	4,1	7,32	2,7	7,4	72	16,1	0,002181
MS2 100L-2	3	10,8	6,01	3,62	10,20	5,88	3,40	9,78	5,67	3,26	2880	84,6	0,87	3,4	3,8	9,96	2,4	7,8	73	24,3	0,005431
MS2 112M-2	4	14,1	8,14	4,70	13,4	7,73	4,47	12,9	7,46	4,30	2910	85,8	0,87	3,4	3,8	13,16	2,2	9,7	77	26,4	0,006266
MS2 132S1-2	5,5	18,9	10,9	6,30	18,0	10,4	5,99	17,3	9,99	5,77	2920	87	0,88	3,9	4	18,25	2,1	9,9	80	42,3	0,012022
MS2 132S2-2	7,5	25,2	14,5	8,39	23,9	13,8	7,97	23,0	13,3	7,68	2910	88,1	0,89	3,5	3,7	24,47	1,9	9,5	80	46,2	0,014635
MS2 160M1-2	11	36,4	21,0	12,1	34,6	20,0	11,5	33,3	19,2	11,1	2940	89,4	0,89	3,2	3,2	20,23	2,2	9	86	79,2	0,048471
MS2 160M2-2	15	48,6	28,0	16,2	46,1	26,6	15,4	44,5	25,7	14,8	2930	90,3	0,9	3,2	3,2	27,68	2,2	9	86	96,6	0,059421
MS2 160L-2	18,5	58,9	34,0	19,6	55,9	32,3	18,6	53,9	31,1	18,0	2930	90,9	0,91	3,2	3,2	33,42	2,2	9	86	102,5	0,068807
MS2 180M-2	22	69,7	40,2	23,2	66,2	38,2	22,1	63,8	36,8	21,3	2950	91,3	0,91	2,5	2	39,11	1,4	8,1	91	128	0,095016
MS2 200L1-2	30	94,3	54,4	31,4	89,6	51,7	29,9	86,3	49,9	28,8	2950	92	0,91	2,5	3,3	51,93	1,3	8,8	94	158	0,122246
MS2 200L2-2	37	115,7	66,8	38,6	109,9	63,4	36,6	105,9	61,2	35,3	2960	92,5	0,91	2,8	3,5	63,48	1,3	9,6	94	181,3	0,148816

(*) Weights are indicative may vary by changing the materials used, Simotop Group Spa reserves the right to modify this data at any time and without notice.

Electrical data (50Hz) efficiency IE2 - 4 poles

Type	Power (kW)	Current (A)			Current (A)			Current (A)			rpm	Eff. (%)	Power factor (Cosφ)	Cs/ Cn	Cmax/ Cn	Cn (Nm)	Cmin/ Cn	Is/In	dB(A)	Weight (Kg)*	PD² Kgm²
		220V	380V	660V	230V	400V	690V	240V	415V	720V											
MS2 802-4	0,75	3,31	1,91	1,10	3,14	1,81	1,05	3,03	1,75	1,01	1410	79,6	0,75	3	2,9	5,27	2,4	5,8	58	11,1	0,002060
MS2 90S-4	1,1	5,01	2,89	1,67	4,76	2,75	1,59	4,59	2,65	1,53	1420	81,4	0,71	2,8	3,1	7,61	2,6	5,6	61	13,85	0,002873
MS2 90L-4	1,5	6,71	3,88	2,24	6,38	3,68	2,13	6,15	3,55	2,05	1420	82,8	0,71	3	3,1	10,39	2,7	6,2	61	16,9	0,003709
MS2 100L1-4	2,2	8,92	5,15	2,97	8,47	4,89	2,82	8,17	4,72	2,72	1440	84,3	0,77	3,3	3,6	14,76	2,9	7,6	64	22,4	0,007306
MS2 100L2-4	3	11,8	6,83	3,95	11,2	6,49	3,75	10,8	6,26	3,61	1440	85,5	0,78	3,4	3,6	20,13	3	7,4	64	26,4	0,009053
MS2 112M-4	4	15,0	8,66	5,00	14,3	8,23	4,75	13,7	7,93	4,58	1440	86,6	0,81	2,9	3,1	26,89	2,3	8,2	65	32,3	0,013305
MS2 132S-4	5,5	20,1	11,6	6,71	19,1	11,0	6,37	18,4	10,6	6,14	1450	87,7	0,82	2,6	3,4	36,25	2,2	8,7	71	43	0,027736
MS2 132M-4	7,5	26,5	15,3	8,83	25,2	14,5	8,39	24,3	14,0	8,09	1450	88,7	0,84	3,1	3,4	49,21	2,1	8,8	71	52,6	0,035864
MS2 160M-4	11	38,4	22,2	12,8	36,5	21,0	12,2	35,1	20,3	11,7	1460	89,8	0,84	2,5	2,9	71,86	1,6	7,3	75	81,5	0,089630
MS2 160L1-4	15	51,9	29,9	17,3	49,3	28,4	16,4	47,5	27,4	15,8	1460	90,6	0,84	2,9	3	97,90	1,7	8,2	75	103,5	0,118354
MS2 180M-4	18,5	61,4	35,4	20,5	58,3	33,7	19,4	56,2	32,4	18,7	1460	91,2	0,87	2,4	3	121,32	1,8	7,8	80	119	0,155064
MS2 180L-4	22	71,8	41,5	23,9	68,2	39,4	22,7	65,8	38,0	21,9	1460	91,6	0,88	2,4	2,8	143,26	1,7	7,7	80	129	0,173293
MS2 200L-4	30	99,5	57,4	33,2	94,5	54,6	31,5	91,1	52,6	30,4	1470	92,3	0,86	3,2	3,7	195,54	2,3	9,5	83	30	0,242313

(*) Weights are indicative may vary by changing the materials used, Simotop Group Spa reserves the right to modify this data at any time and without notice.

Electrical data (50Hz) Efficiency IE2 - 6 poles

Type	Power (kW)	Current (A)			Current (A)			Current (A)			rpm	Eff. (%)	Power factor (Cosφ)	Cs/ Cn	Cmax/ Cn	Cn (Nm)	Cmin/ Cn	Is/In	dB(A)	Weight (Kg)*	PD^2 Kgm^2
		220V	380V	660V	230V	400V	690V	240V	415V	720V											
MS2 90S-6	0,75	3,77	2,18	1,26	3,58	2,07	1,19	3,45	1,99	1,15	935	75,9	0,69	2,4	2,6	7,75	2,2	4,7	59	13	0,003365
MS2 90L-6	1,1	5,37	3,10	1,79	5,10	2,95	1,70	4,92	2,84	1,64	940	78,1	0,69	2,7	2,7	11,43	2,3	5	59	16,4	0,004805
MS2 100L-6	1,5	6,87	3,97	2,29	6,53	3,77	2,18	6,29	3,63	2,10	960	79,8	0,72	2,9	3	15,09	2,3	6,2	61	21,6	0,009554
MS2 112M-6	2,2	9,44	5,45	3,15	8,96	5,18	2,99	8,64	4,99	2,88	950	81,8	0,75	2,5	2,6	22,13	2	5,6	64	29,5	0,016969
MS2 132S-6	3	12,5	7,20	4,16	11,8	6,84	3,95	11,4	6,59	3,81	960	83,3	0,76	2,2	2,6	30,32	1,7	6,1	64	35,2	0,029932
MS2 132M1-6	4	16,6	9,58	5,53	15,8	9,10	5,25	15,2	8,77	5,06	965	84,6	0,75	2,5	2,6	41,25	1,7	6,5	68	45	0,040259
MS2 132M2-6	5,5	22,7	13,1	7,58	21,6	12,5	7,20	20,8	12,0	6,94	965	86	0,74	3	2,9	54,86	1,9	7,2	68	53,5	0,053408
MS2 160M-6	7,5	30,6	17,7	10,2	29,1	16,8	9,69	28,0	16,2	9,34	970	87,2	0,74	2,8	2,9	74,69	1,6	7,1	68	72,6	0,089688
MS2 160L-6	11	42,9	24,8	14,3	40,8	23,6	13,6	39,3	22,7	13,1	970	88,7	0,76	2,9	2,7	108,92	1,6	7,3	73	89,5	0,122730
MS2 180L-6	15	53,0	30,6	17,7	50,4	29,1	16,8	48,5	28,0	16,2	975	89,7	0,83	2,2	2,7	147,77	1,2	8	79	130	0,254063
MS2 200L1-6	18,5	64,9	37,5	21,6	61,6	35,6	20,5	59,4	34,3	19,8	975	90,4	0,83	2,1	2,9	180,32	1,5	8,3	82	149	0,303941
MS2 200L2-6	22	76,7	44,3	25,6	72,9	42,1	24,3	70,3	40,6	23,4	975	90,9	0,83	2,2	3	214,53	1,6	8,9	82	167	0,353160

(*) Weights are indicative may vary by changing the materials used, Simotop Group Spa reserves the right to modify this data at any time and without notice.

SIMOTOP® GROUP

30. MS SERIES - Three-Phase Asynchronous double speed motors

Electrical data (50Hz) single winding - 2/4 poles

Type	Power (kW)		rpm		Eff. (%)		Power factor (Cosφ)		Current In(A) 400V		Cn (Nm)		Cs/Cn		Is/In		Cmax/Cn	
	2P	4P	2P	4P	2P	4P	2P	4P	2P	4P	2P	4P	2P	4P	2P	4P	2P	4P
MSD 711-2/4	0.3	0.22	2750	1350	60	55	0.8	0.73	0.90	0.79	1.04	1.56	1.7	1.7	3.5	3.5	1.9	1.9
MSD 712-2/4	0.45	0.3	2790	1380	63	58	0.8	0.73	1.29	1.02	1.54	2.08	2	2	4	4	2	2
MSD 801-2/4	0.55	0.45	2800	1380	65	64	0.84	0.75	1.45	1.35	1.88	3.11	2	2	4.5	4.5	2.1	2.1
MSD 802-2/4	0.75	0.6	2800	1400	67	68	0.86	0.77	1.88	1.65	2.56	4.09	1.8	1.8	4.5	4.5	2	2
MSD 90S-2/4	1.25	0.95	2820	1400	72	68	0.86	0.82	2.91	2.46	4.23	6.48	2	2	5	5	2	2
MSD 90L-2/4	1.7	1.32	2830	1400	73	70	0.86	0.83	3.91	3.28	5.74	9.00	2	2	5	5	2	2
MSD 100L1-2/4	2.4	1.84	2830	1410	73	76	0.86	0.83	5.52	4.21	8.10	12.46	2	2	5.5	5	2	2
MSD 100L2-2/4	3.3	2.6	2840	1420	74	78	0.86	0.85	7.48	5.66	11.10	17.19	2	1.9	5.5	5	2	1.9
MSD 112M-2/4	4.5	4	2860	1430	77	79	0.85	0.86	9.92	8.50	15.03	26.71	2	1.8	5.5	5	2.2	2
MSD 132S-2/4	6	5	2860	1440	79	82	0.84	0.86	13.05	10.23	20.03	33.16	2	1.5	5.5	5.5	2.2	1.9
MSD 132M-2/4	8	6.6	2870	1440	82	84	0.84	0.86	16.76	13.09	26.62	43.77	2	2	6	6	2.2	2.2
MSD 160M-2/4	11	9	2920	1450	84	84	0.85	0.82	22.23	18.86	35.98	59.28	1.8	1.8	7	6	2	2
MSD 160L-2/4	15	12	2920	1450	86	84	0.87	0.83	28.94	24.84	49.06	79.03	2	2	7	7	2.2	2.2

Electrical data (50Hz) single winding - 4/8 poles

Type	Power (kW)		rpm		Eff. (%)		Power factor (Cosφ)		Current In(A) 400V		Cn (Nm)		Cs/Cn		Is/In		Cmax/Cn	
	4P	8P	4P	8P	4P	8P	4P	8P	4P	8P	4P	8P	4P	8P	4P	8P	4P	8P
MSD 801-4/8	0.25	0.15	1380	680	58	40	0.77	0.60	0.81	0.90	1.73	2.11	2	2	4.5	3	2	2
MSD 802-4/8	0.45	0.25	1390	685	68	48	0.80	0.60	1.19	1.25	3.09	3.49	1.8	2	4.5	3	2	2
MSD 90S-4/8	0.55	0.3	1400	690	68	50	0.83	0.61	1.41	1.42	3.75	4.15	1.8	2	4.5	3.5	2	2
MSD 90L-4/8	0.8	0.45	1400	690	68	53	0.83	0.63	2.05	1.95	5.46	6.23	1.8	1.6	4	3	1.9	1.8
MSD 100L1-4/8	1.25	0.6	1400	700	69	54	0.82	0.56	3.19	2.86	8.53	8.16	1.8	2	5	3.5	2	2
MSD 100L2-4/8	1.76	0.88	1400	700	71	58	0.84	0.56	4.26	3.91	12.00	12.00	1.8	2	5.5	4	2	2
MSD 112M-4/8	2.2	1.5	1420	700	75	64	0.82	0.61	5.16	5.54	14.80	20.46	2	2	6	4	2	2
MSD 132S-4/8	3.3	2.2	1430	705	78	70	0.84	0.64	7.27	7.09	22.04	29.8	2	2	6	5	2	2
MSD 132M-4/8	4.5	3	1430	705	82	77	0.85	0.65	9.32	8.65	30.05	40.64	2	2	6	5	2	2
MSD 160M1-4/8	5.5	4	1440	710	82	77	0.81	0.69	11.95	10.87	36.48	53.80	2.1	1.7	7.6	4.6	2.3	2.2
MSD 160M2-4/8	7.5	5	1440	710	82	79	0.89	0.78	14.83	11. 71	49.74	67.25	1.7	1.6	6.6	4.5	2.3	2.1
MSD 160L-4/8	10	7	1450	715	84	82	0.90	0.78	19.09	15.80	65.86	93.50	1.8	1.9	5.5	5	2.3	2.1

Electrical data (50Hz) double winding - 4/6 poles

Type	Power (kW)		rpm		Eff. (%)		Power factor (Cosφ)		Current In(A) 400V		Cn (Nm)		Cs/Cn		Is/In		Cmax/Cn	
	4P	6P	4P	6P	4P	6P	4P	6P	4P	6P	4P	6P	4P	6P	4P	6P	4P	6P
MSD 801-4/6	0.3	0.22	1400	910	60	55	0.74	0.69	0.98	0.84	2.05	2.31	2	1.8	4.5	4	2	2
MSD 802-4/6	0.45	0.3	1410	920	63	58	0.75	0.7	1.37	1.07	3.05	3.11	2	1.8	4.5	4	2	2
MSD 90S-4/6	0.66	0.45	1410	920	66	61	0.76	0.65	1.9	1.64	4.47	4.67	1.7	1.7	5	4.5	2	2
MSD 90L-4/6	0.88	0.6	1420	930	70	64	0.77	0.67	2.36	2.02	5.92	6.16	1.7	1.7	5	4.5	2	2
MSD 100L1-4/6	1.32	0.88	1420	940	72	67	0.85	0.75	3.11	2.3	8.88	8.94	1.8	1.8	6	5	2	2
MSD 100L2-4/6	1.76	1.2	1430	950	74	70	0.85	0.75	4.04	3.3	11.75	12.06	1.8	1.8	6	5	2	2
MSD 112M-4/6	2.2	1.5	1430	950	76	70	0.8	0.70	5.22	4.42	14.69	15	2	1.8	6	5	2.2	2.2
MSD 132S-4/6	3.3	2.2	1440	960	82	78	0.81	0.72	7.17	5.65	21.9	21.9	2	2	7	6	2.2	2.2
MSD 132M-4/6	4.5	3	1450	970	83	80	0.82	0.74	9.54	7.31	29.6	29.5	2	2	7	6	2.3	2.3
MSD 160M-4/6	6.6	4.5	1460	970	84	81	0.84	0.78	13.5	10.3	43.2	44.3	1.8	1.8	7	6	2.3	2.3
MSD 160L-4/6	8.8	6	1460	970	84	81	0.85	0.79	17.8	13.5	57.6	59.1	1.8	1.8	7	6	2.3	2.3

SIMOTOP® GROUP

31. MS SERIES – Overall and Installation dimensions

Measures in mm

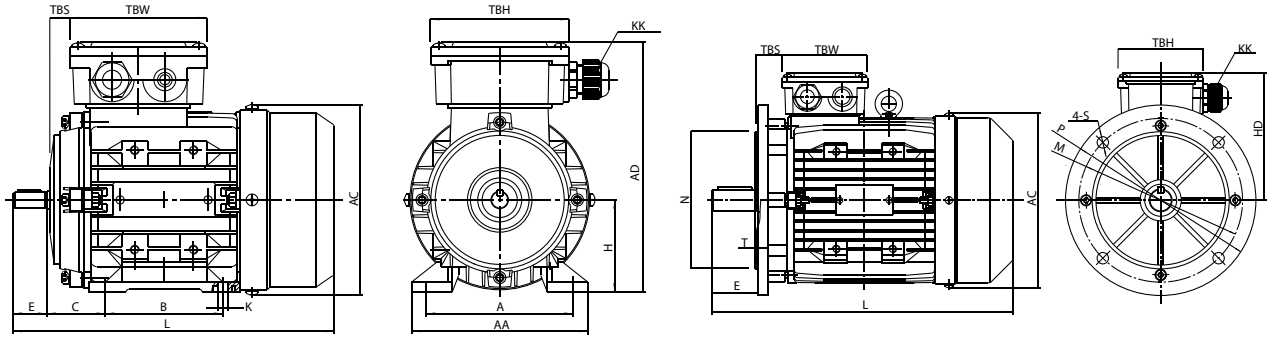

IM B3

IM B5

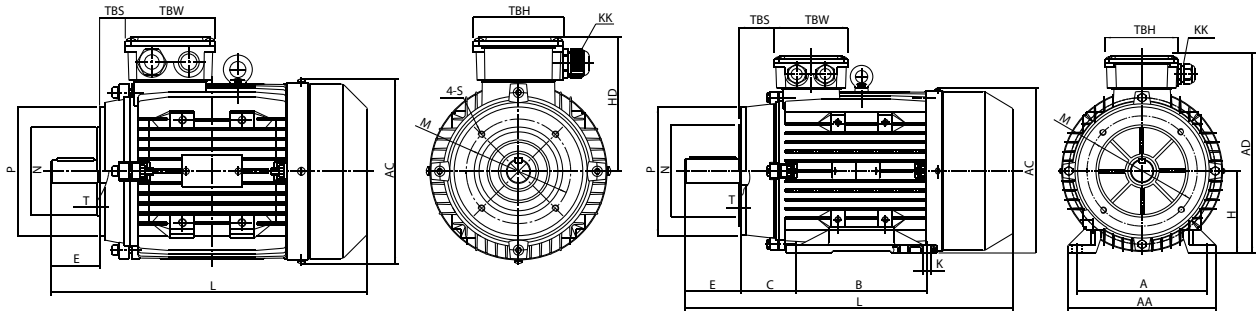

IM B14

IM B34

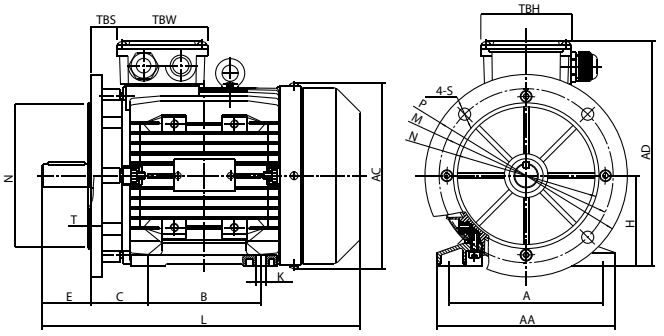

IM B35

Frame size	B3					Shaft							General								
	H	A	B	C	K	D	E	F	G	SS	XX	ZZ	AA	AD	HD	AC	L	KK	TBS	TBW	TBH
56	56	90	71	36	5.8X8.8	Ø9	20	3	7.2	M3	9	12	110	156	100	Ø117	196	1-M16X1.5	14	88	88
63	63	100	80	40	7X10	Ø11	23	4	8.5	M4	10	14	120	171	108	Ø130	220	1-M16X1.5	14	94	94
71	71	112	90	45	7X10	Ø14	30	5	11	M5	12	17	132	186	115	Ø147	241	1-M20X1.5	20	94	94
80	80	125	100	50	10X13	Ø19	40	6	15.5	M6	16	21	160	213	133	Ø163	290	1-M20X1.5	27	105	105
90S	90	140	100	56	10X13	Ø24	50	8	20	M8	19	25	175	229	139	Ø183	312	1-M20X1.5	30	105	105
90L1/L2	90	140	125	56	10X13	Ø24	50	8	20	M8	19	25	175	229	139	Ø183	337/367	1-M20X1.5	30	105	105
100	100	160	140	63	12X15	Ø28	60	8	24	M10	22	30	198	252	152	Ø205	369	2-M20X1.5	26	105	105
112	112	190	140	70	12X15	Ø28	60	8	24	M10	22	30	220	279	167	Ø229	395	2-M25X1.5	32	112	112
132S	132	216	140	89	12X15	Ø38	80	10	33	M12	28	37	252	318	186	Ø265	437	2-M25X1.5	38	112	112
132M/L	132	216	178	89	12X15	Ø38	80	10	33	M12	28	37	252	318	186	Ø265	475/501	2-M25X1.5	38	112	112
160M/L	160	254	210/254	108	15X19	Ø42	110	12	37	M16	36	45	290	384	224	Ø325	640	2-M32X1.5	64	143	143
180M/L	180	279	241/279	121	15X25	Ø48	110	14	42.5	M16	36	45	340	440	260	Ø368	730	2-M32X1.5	73	190	190
200L	200	318	305	133	19X29	Ø55	110	16	49	M20	42	53	390	460	260	Ø368	745	2-M40X1.5	85	190	190

Frame size	B5						B5R						B14						B14B					
	M	N	P	T	S	R	M	N	P	T	S	R	N	M	P	T	S	R	N	M	P	T	S	R
56	Ø100	Ø80	Ø120	3.0	Ø7	0							Ø50	Ø65	Ø80	2.5	M5	0						
63	Ø115	Ø95	Ø140	3.0	Ø10	0							Ø60	Ø75	Ø90	2.5	M5	0	Ø80	Ø100	Ø120	3.0	M6	0
71	Ø130	Ø110	Ø160	3.5	Ø10	0	Ø115	Ø95	Ø140	3.5	Ø10	0	Ø70	Ø85	Ø105	2.5	M6	0	Ø95	Ø115	Ø140	3.0	M8	0
80	Ø165	Ø130	Ø200	3.5	Ø12	0	Ø130	Ø110	Ø160	3.5	Ø10	0	Ø80	Ø100	Ø120	3.0	M6	0	Ø110	Ø130	Ø160	3.5	M8	0
90S	Ø165	Ø130	Ø200	3.5	Ø12	0	Ø130	Ø110	Ø160	3.5	Ø10	0	Ø95	Ø115	Ø140	3.0	M8	0	Ø110	Ø130	Ø160	3.5	M8	0
90L1/L2	Ø165	Ø130	Ø200	3.5	Ø12	0	Ø130	Ø110	Ø160	3.5	Ø10	0	Ø95	Ø115	Ø140	3.0	M8	0	Ø110	Ø130	Ø160	3.5	M8	0
100	Ø215	Ø180	Ø250	4.0	Ø15	0	Ø165	Ø130	Ø200	4.0	Ø12	0	Ø110	Ø130	Ø160	3.5	M8	0	Ø130	Ø165	Ø200	3.5	M10	0
112	Ø215	Ø180	Ø250	4.0	Ø15	0	Ø165	Ø130	Ø200	4.0	Ø12	0	Ø110	Ø130	Ø160	3.5	M8	0	Ø130	Ø165	Ø200	3.5	M10	0
132S	Ø265	Ø230	Ø300	4.0	Ø15	0	Ø215	Ø180	Ø250	4.0	Ø15	0	Ø130	Ø165	Ø200	4.0	M10	0	Ø180	Ø215	Ø250	4.0	M12	0
132M/L	Ø265	Ø230	Ø300	4.0	Ø15	0	Ø215	Ø180	Ø250	4.0	Ø15	0	Ø130	Ø165	Ø200	4.0	M10	0	Ø180	Ø215	Ø250	4.0	M12	0
160M/L	Ø300	Ø250	Ø350	5.0	Ø19	0							Ø180	Ø215	Ø250	4.0	M12	0						
180M/L	Ø300	Ø250	Ø350	5.0	Ø19	0																		
200L	Ø350	Ø300	Ø400	5.0	Ø19	0																		

32. MS SERIES - Exploded view drawings and Spare Parts list

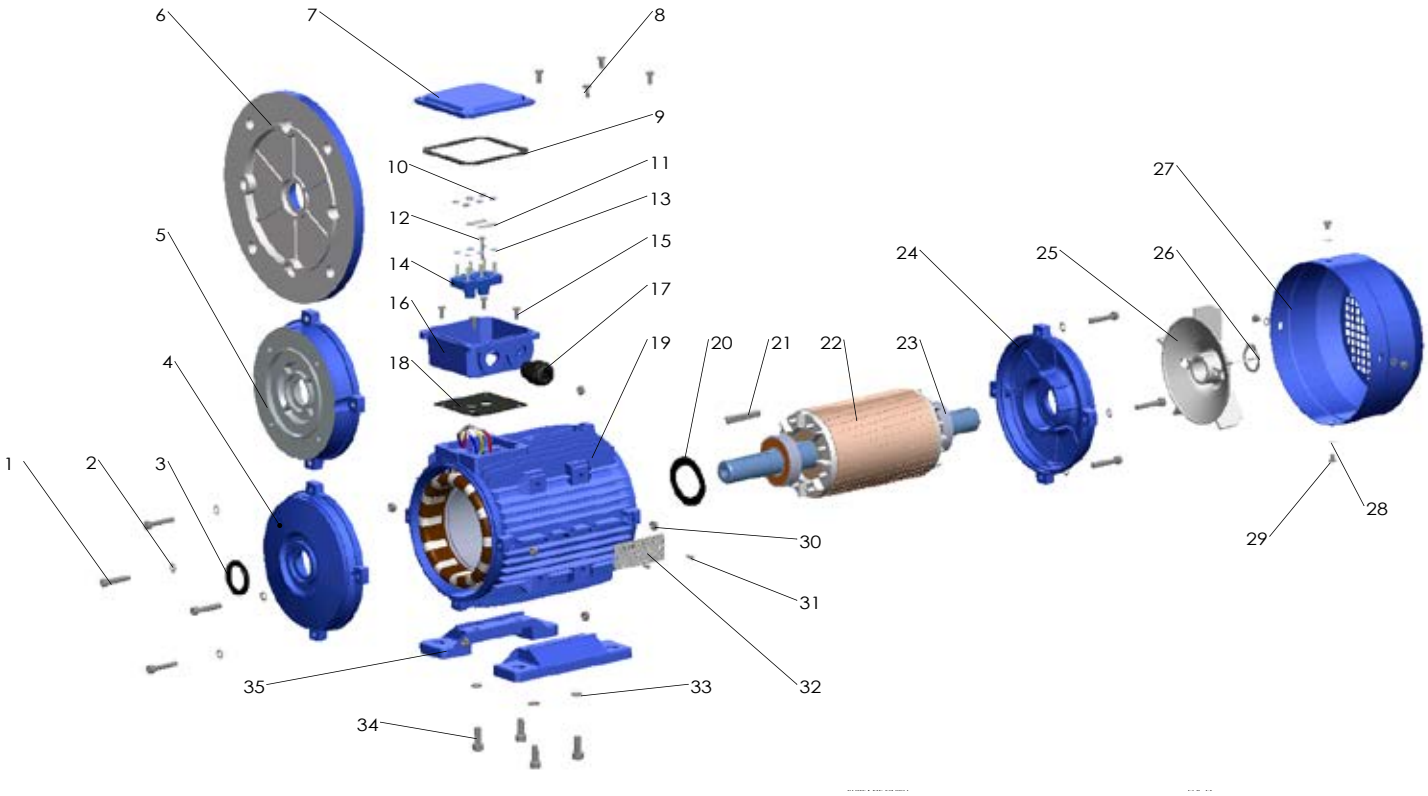

1. Screw
2. Gasket
3. Oil seal
4. DE endshleld
5. B14 Flange
6. B5 Flange
7. Terminal box cover
8. Terminal box fixing screws
9. Terminal box upper gasket
10. Terminal box fixing nut
11. Terminal bridge
12. Terminal pin
13. Terminal shim
14. Terminal board
15. Terminal box fixing screws
16. Terminal box case
17. Cable gland
18. Terminal box bottomgasket
19. Frame
20. Preload washer
21. Key
22. Rotor
23. Bearing
24. NDE endshield
25. Cooling fan
26. Fan circlip
27. Fan cover
28. Fan cover fixing shim
29. Fan cover fixing screws
30. Endshiels fixing nut
31. Rivet
32. Nameplate
33. Foot fixing nut
34. Foot fixing screws
35. Foot

electric motors
SIMOTOP GROUP

MYT Series

ELECTRICAL AND MECHANICAL DATA

ALUMINUM HOUSING

33. MYT SERIES - Single Phase Asynchronous Motors with high starting torque

Electrical data (50Hz) - 2 poles

Model	Power (kW)	Current at 230V	rpm	Eff. (%)	Power factor (Cosφ)	Cn (Nm)	Cs/Cn	Cmax/ Cn	Starting Current (A)	Capacitor (µF/V)	dB(A)	Weight (Kg)*	PD² Kgm²
MYT631-2	0,18	1,29	2750	62	0,98	0,63	0,7	1,8	4	10µf/450V	70	4	0,000141
MYT632-2	0,25	1,71	2750	65	0,98	0,87	0,65	1,75	5,5	12µf/450V	70	5	0,000168
MYT633-2	0,37	2,39	2740	68	0,99	1,29	0,7	1,8	8	16µf/450V	75	5	0,000216
MYT711-2	0,37	2,59	2640	66	0,94	1,34	0,7	1,65	8	14µf/450V	75	6	0,000356
MYT712-2	0,55	3,52	2760	71,5	0,95	1,90	0,7	1,8	14	20µf/450V	75	8	0,000489
MYT801-2	0,75	4,87	2760	69	0,97	2,60	0,7	1,8	17,5	25µf/450V	75	10	0,001007
MYT802-2	1,1	6,53	2780	74	0,99	3,78	0,7	1,8	25	40µf/450V	78	12	0,001238
MYT90S-2	1,5	8,56	2755	77	0,99	5,20	0,65	1,8	31	50µf/450V	80	15	0,001665
MYT90LB-2	1,84	10,8	2800	75	0,99	6,28	0,65	1,8	50	70µf/450V	80	15	0,002136
MYT90L-2	2,2	12,4	2765	78	0,99	7,60	0,65	1,8	51	70µf/450V	80	18	0,002136
MYT90L2-2	3	16,8	2800	79	0,98	10,24	0,48	1,8	83	90µf/450V	83	22	0,002686
MYT100L0-2	2,2	12,7	2825	77	0,98	7,44	0,55	1,8	60	70µf/450V	80	21	0,004803
MYT100L-2	3	17,1	2765	77	0,99	10,37	0,55	1,75	64	90µf/450V	83	24	0,005383

(*) Weights are indicative may vary by changing the materials used, Simotop Group Spa reserves the right to modify this data at any time and without notice.

Electrical data (50Hz) - 4 poles

Model	Power (kW)	Current at 230V	rpm	Eff. (%)	Power factor (Cosφ)	Cn (Nm)	Cs/Cn	Cmax/ Cn	Starting Current (A)	Capacitor (µF/V)	dB(A)	Weight (Kg)*	PD² Kgm²
MYT631-4	0,12	0,97	1400	55	0,98	0,82	0,7	1,75	2,5	8µf/450V	65	4,45	0,000298
MYT632-4	0,18	1,35	1380	59	0,98	1,25	0,6	1,65	3,5	10µf/450V	65	5,05	0,000373
MYT633-4	0,25	1,76	1380	62,5	0,99	1,73	0,63	1,57	5	14µf/450V	65	5,4	0,000448
MYT711-4	0,25	1,81	1310	60,5	0,99	1,82	0,7	1,55	4,5	14µf/450V	65	6,2	0,000692
MYT712-4	0,37	2,48	1325	65,5	0,99	2,67	0,7	1,52	6,5	20µf/450V	68	7,3	0,000898
MYT800-4	0,37	2,63	1350	63	0,97	2,62	0,7	1,7	7,5	16µf/450V	68	8,5	0,001396
MYT801-4	0,55	3,70	1330	66	0,98	3,95	0,7	1,57	10,5	25µf/450V	73	10,05	0,001728
MYT802-4	0,75	4,82	1355	69	0,98	5,29	0,67	1,65	16	35µf/450V	73	11,4	0,002393
MYT90S-4	1,1	6,94	1355	72,5	0,95	7,76	0,68	1,8	22	40µf/450V	75	14,4	0,002743
MYT90L-4	1,5	9,28	1360	74	0,95	10,54	0,68	1,8	32	50µf/450V	78	17,5	0,003483
MYT90L2-4	1,84	10,6	1360	76	0,99	12,93	0,68	1,8	36	70µf/450V	79	19,5	0,004225
MYT100L1-4	2,2	12,64	1390	78	0,97	15,12	0,48	1,75	49	70µf/450V	80	24,5	0,008665
MYT100L2-4	3	16,57	1380	79,5	0,99	20,77	0,45	1,6	61	90µf/450V	80	32	0,010853

(*) Weights are indicative may vary by changing the materials used, Simotop Group Spa reserves the right to modify this data at any time and without notice.

Electrical data (50Hz) - 6 poles

Model	Power (kW)	Current at 230V	rpm	Eff. (%)	Power factor (Cosφ)	Cn (Nm)	Cs/Cn	Cmax/ Cn	Starting Current (A)	Capacitor (µF/V)	dB(A)	Weight (Kg)*	PD² Kgm²
MYT631-6	0,09	0,91	900	44,5	0,97	0,96	0,6	1,45	2	8µf/450V	65	5	0,000364
MYT632-6	0,12	1,12	875	47,5	0,98	1,31	0,6	1,45	2,5	11µf/450V	65	5,5	0,000442
MYT711-6	0,18	1,52	930	52	0,99	1,85	0,65	1,7	3,5	14µf/450V	68	6,3	0,000585
MYT712-6	0,25	2,12	925	54	0,95	2,58	0,58	1,7	5	16µf/450V	68	7,6	0,001151
MYT801-6	0,37	2,63	925	63	0,97	3,82	0,67	1,7	7,5	20µf/450V	68	9	0,002232
MYT802-6	0,55	3,71	915	66,5	0,97	5,74	0,63	1,7	11	30µf/450V	70	11,6	0,002903
MYT90S-6	0,75	4,93	890	67,5	0,98	8,05	0.65	1,5	12	40µf/450V	70	13,5	0,003523
MYT90L-6	1,1	7,15	905	69	0,97	11,61	0,55	1,7	21	50µf/450V	70	16,2	0,004957

(*) Weights are indicative may vary by changing the materials used, Simotop Group Spa reserves the right to modify this data at any time and without notice.

SIMOTOP® GROUP

34. MYT SERIES - Overall and Installation dimensions

Dimensions in mm

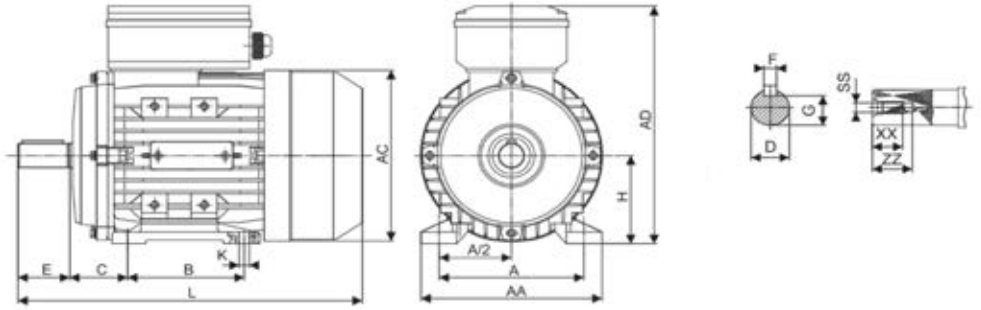

IM B3

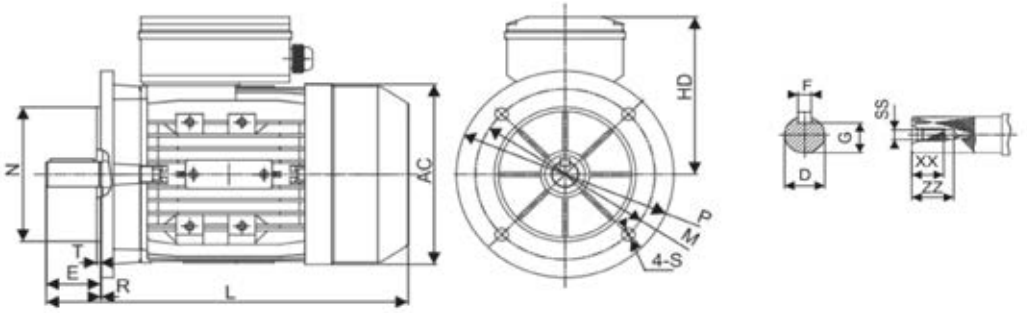

IM B5

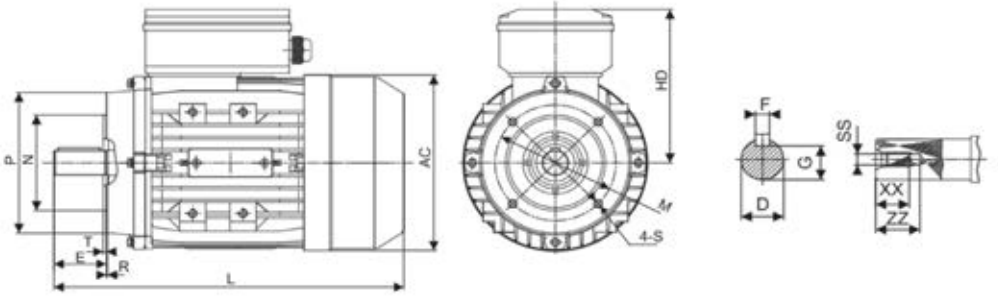

IM B14

Frame Size	Mounting Dimensions (mm)																					Overall Dimensions (mm)					Shaft End Crew Dimensions		
	A	B	C	D	E	F	G	H	K	IMB14						IMB5													
										M	N	P	T	R	S	M	N	P	T	R	S								
56	90	71	36	ϕ9	20	3	7,2	56	5,8x8,8	ϕ65	ϕ50	ϕ80	2,5	0	M5	ϕ100	ϕ 80	ϕ120	3,0	0	ϕ7	110	ϕ117	144	88	196	M3	9	12
63	100	80	40	ϕ11	23	4	8,5	63	7x10	ϕ75	ϕ60	ϕ90	2,5	0	M5	ϕ115	ϕ95	ϕ140	3,0	0	ϕ10	120	ϕ130	181	118	220	M4	10	14
71	112	90	45	ϕ14	30	5	11	71	7x10	ϕ85	ϕ70	ϕ105	2,5	0	M6	ϕ130	ϕ110	ϕ160	3,5	0	ϕ10	132	ϕ147	196	125	241/255	M5	12	17
80	125	100	50	ϕ19	40	6	15,5	80	10x13	ϕ100	ϕ80	ϕ120	3,0	0	M6	ϕ165	ϕ130	ϕ200	3,5	0	ϕ12	160	ϕ163	226	146	290	M6	16	21
90S	140	100	56	ϕ24	50	8	20	90	10x13	ϕ115	ϕ95	ϕ140	3,0	0	M8	ϕ165	ϕ130	ϕ201	3,5	0	ϕ12	175	ϕ183	243	153	312	M8	19	25
90L	140	125	56	ϕ24	50	8	20	90	10x13	ϕ115	ϕ95	ϕ140	3,0	0	M8	ϕ165	ϕ130	ϕ202	3,5	0	ϕ12	175	ϕ183	243	153	337/367	M8	19	25
100	160	140	63	ϕ28	60	8	20	100	12x15	ϕ130	ϕ100	ϕ160	3,5	0	M8	ϕ215	ϕ180	ϕ250	4,0	0	ϕ15	198	ϕ205	265	165	369/387	M10	22	30

SIMOTOP® GROUP

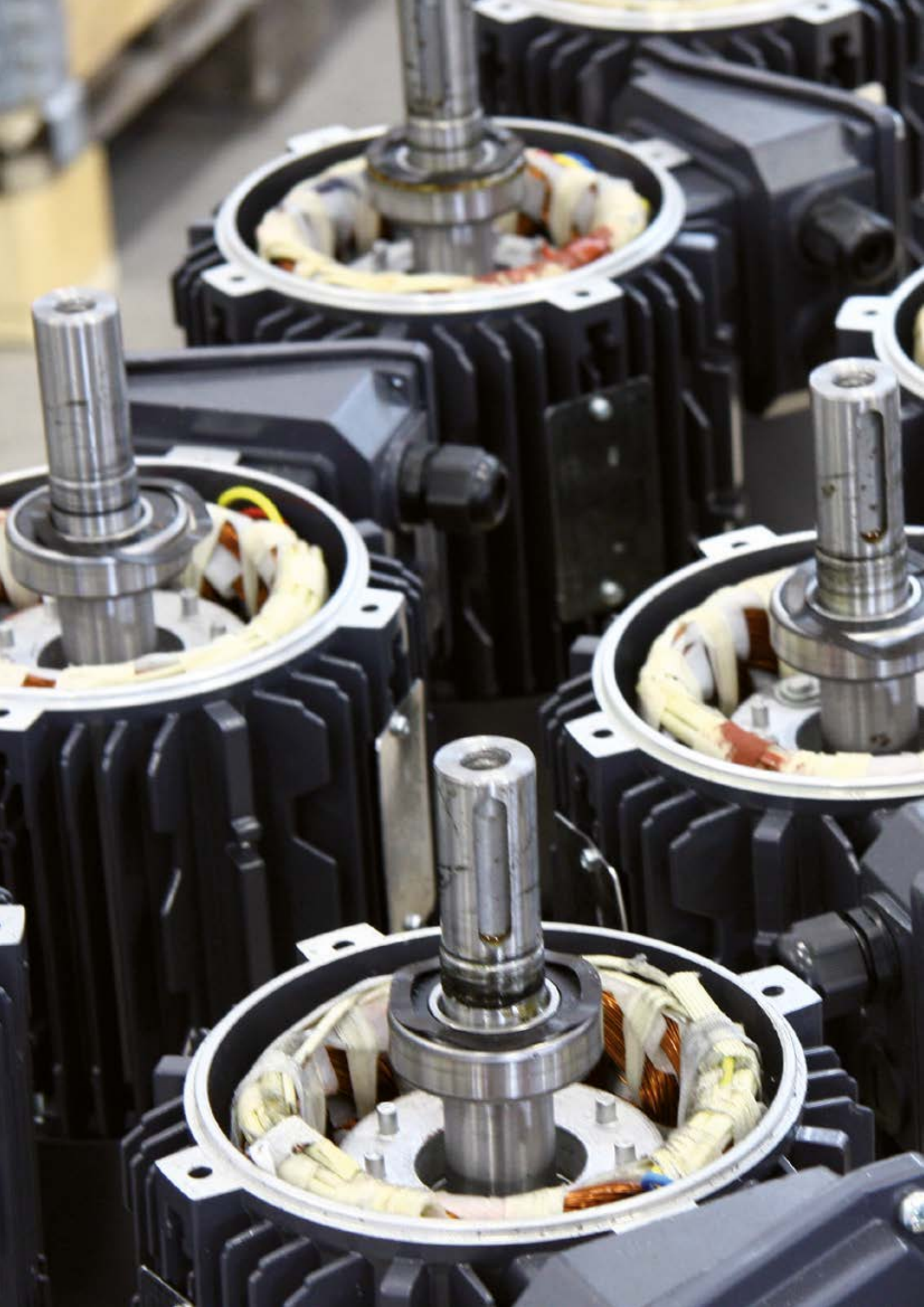

electric motors
SIMOTOP GROUP

TA Series

ELECTRICAL AND MECHANICAL DATA

ALUMINUM HOUSING

35. TA SERIES – Three-Phase Asynchronous single speed motors

Electrical data (50Hz) Efficiency IE1 - 2 poles

Type	Power (kW)	Current (A)			Current (A)			Current (A)			rpm	Eff. (%)	Power factor (Cosφ)	Cs/ Cn	Cmax/ Cn	Cn (Nm)	Cmin/ Cn	Is/In	dB(A)	PD² Kgm²
		220V	380V	660V	230V	400V	690V	240V	415V	720V										
T1A 801-2	0,75	3,37	1,95	1,12	3,22	1,85	1,07	3,09	1,78	1,03	2860	72,1	0,81	2,1	2,5	2,52	1,5	5,7	67	0,000896
T1A 802-2	1,1	4,70	2,72	1,57	4,5	2,58	1,5	4,31	2,49	1,44	2860	75	0,82	2,6	2,8	3,70	1,8	6,5	67	0,001124
T1A 90S-2	1,5	6,31	3,64	2,10	6	3,46	2	5,78	3,33	1,93	2870	77,2	0,81	2,3	2,8	5,04	1,4	6,6	72	0,001856
T1A 90L1-2	2,2	8,75	5,05	2,92	8,31	4,8	2,77	8,01	4,63	2,67	2870	79,7	0,83	2,6	2,7	7,41	1,8	7,1	72	0,002306
T1A 100L1-2	3	11,8	6,82	3,94	11,27	6,48	3,76	10,8	6,25	3,61	2890	81.5	0,82	2,7	3,2	10,08	2,1	7,7	76	0,003776
T1A 112M1-2	4	14,5	8,4	4,85	13,82	7,98	4,61	13,3	7,69	4,44	2900	83,1	0,87	2,8	3,6	13,17	1,7	9,2	77	0,006311
T1A 132S1-2	5,5	19,9	11,5	6,62	18,95	10,9	6,32	18,2	10,5	6,07	2900	84,7	0,86	2,2	2,8	18,14	2,2	6,8	80	0,012058
T1A 132S2-2	7,5	26,6	15,4	8,87	25,46	14,6	8,49	24,4	14,1	8,12	2910	86	0,86	2,7	3,2	24,70	2,5	8,2	80	0,015212
T1A 160M1-2	11	38,0	21,9	12,7	36,23	20,83	12,08	34,8	20,1	11,6	2910	87.6	0,87	2,6	3,1	36,10	1,5	7,9	86	0,044380
T1A 160M2-2	15	51,2	29,5	17,1	48,79	28,06	16,26	46,8	27,0	15,6	2910	88.7	0,87	2,8	3,3	49,26	1,4	8,6	86	0,055805
T1A 160L1-2	18,5	61,3	35,4	20,4	58,43	33,60	19,48	56,1	32,4	18,7	2910	89.3	0,89	3	3,4	69,74	1,6	9,3	86	0,065593
T1A 180M-2	22	71,3	41,3	23,8	69,0	39,7	23,0	65,3	37,8	21,8	2920	89,9	0,89	2,3	2,6	71,95	2	7,2	88	0,090185
T1A 200L1-2	30	96,0	55,6	32,1	93,3	53,64	31,1	88,0	50,9	29,4	2915	90,7	0,89	2,3	2,6	98,28	2	7	88	0,114999
T1A 200L2-2	37	117	67,9	39,2	114,4	65,80	38,2	108	62,2	35,9	2920	91,2	0,89	2,3	2,7	121	2	7,2	87	0,136738

Electrical data (50Hz) Efficiency IE1 - 4 poles

Type	Power (kW)	Current (A)			Current (A)			Current (A)			rpm	Eff. (%)	Power factor (Cosφ)	Cs/ Cn	Cmax/ Cn	Cn (Nm)	Cmin/ Cn	Is/In	dB(A)	PD² Kgm²
		220V	380V	660V	230V	400V	690V	240V	415V	720V										
T1A 801-4	0,55	2,99	1,73	1,00	2,86	1,64	0,95	2,74	1,58	0,91	1400	71	0,68	2	2,3	3,86	1,6	4,8	57	0,001453
T1A 802-4	0,75	3,90	2,25	1,30	3,73	2,14	1,24	3,57	2,06	1,19	1400	72,1	0,7	2	2,4	5,08	1,7	5	58	0,001690
T1A 90S-4	1,1	5,36	3,09	1,79	5,11	2,94	1,7	4,91	2,83	1,64	1400	75	0,72	2,1	2,3	7,42	1,9	5	61	0,002675
T1A 90L1-4	1,5	6,91	3,99	2,30	6,6	3,79	2,2	6,33	3,65	2,11	1410	77,2	0,74	2,6	2,4	10,16	2,1	5,7	61	0,003519
T1A 100L1-4	2,2	9,55	5,52	3,18	9,12	5,24	3,04	8,75	5,05	2,92	1430	79,7	0,76	2,2	2,8	14,79	1,9	6	64	0,006775
T1A 100L2-4	3	12,6	7,26	4,19	12	6,9	4	11,5	6,65	3,84	1430	81,5	0,77	2,5	2,8	20,17	2,1	6,7	64	0,008424
T1A 112M1-4	4	16,0	9,25	5,34	15,2	8,79	5,08	14,7	8,47	4,89	1440	83,1	0,79	2,3	3,3	26,81	2,1	7,8	65	0,013228
T1A 132S-4	5,5	21,1	12,2	7,03	20,12	11,57	6,71	19,3	11,2	6,44	1440	84,7	0,81	1,8	2,9	36,99	1,7	7,1	71	0,028012
T1A 132M1-4	7,5	28,7	16,6	9,56	27,36	15,73	9,12	26,3	15,2	8,75	1440	86	0,8	2,9	3,3	49,76	1,9	8,4	71	0,037145
T1A 160M-4	11	37,6	21,7	12,5	35,76	20,64	11,92	34,5	19,9	11,5	1460	87.6	0,87	2,3	2,8	73,46	1,3	6,8	75	0,080254
T1A 160L1-4	15	51,3	29,6	17,1	48,76	28,15	16,25	47,0	27,1	15,7	1460	88.7	0,87	2,4	2,6	99,82	1,4	7,5	75	0,105640
T1A 180M-4	18,5	62,4	36,1	20,8	59,1	33,98	19,8	57,2	33,1	19,1	1435	89,3	0,88	2,3	2,7	123,11	2	7,2	78	0,155064
T1A 180L-4	22	73,8	42,7	24.7	70,1	40,60	23,6	67,7	39,1	22,6	1450	89,9	0,87	2,3	2,6	144,89	2	7,3	78	0,173293
T1A 200L-4	30	99,5	57,6	33,2	93,8	53,64	31,1	91,2	52,7	30,4	1450	90,7	0,89	2,3	2,6	197,57	2	7,6	80	0,224084

Electrical data (50Hz) Efficiency IE1 - 6 poles

Type	Power (kW)	Current (A)			Current (A)			Current (A)			rpm	Eff. (%)	Power factor (Cosφ)	Cs/ Cn	Cmax/ Cn	Cn (Nm)	Cmin/ Cn	Is/In	dB(A)	PD² Kgm²
		220V	380V	660V	230V	400V	690V	240V	415V	720V										
T1A 801-6	0,37	2,46	1,42	0,82	2,34	1,35	0,78	2,25	1,30	0,75	910	61	0,65	1,9	2,2	3,93	1,8	3,2	56	0,001596
T1A 802-6	0,55	3,45	1,99	1,15	3,29	1,89	1,1	3,16	1,82	1,05	910	63,6	0,66	2,1	2,3	5,84	1,9	3,5	56	0,002041
T1A 90S-6	0,75	4,21	2,43	1,40	4,01	2,31	1,34	3,86	2,23	1,29	930	70	0,67	1,8	2,2	7,70	1,5	4,1	59	0,003266
T1A 90L-6	1,1	5,93	3,42	1,98	5,65	3,25	1,88	5,43	3,13	1,81	930	72,9	0,67	1,9	2,3	11,29	1,8	4,1	59	0,004281
T1A 100L-6	1,5	7,40	4,27	2,47	7,52	4,06	2,35	6,78	3,91	2,26	940	75,2	0,71	1,9	2,6	15,32	1,8	4,6	61	0,007543
T1A 112M1-6	2,2	10,8	6,23	3,60	10,3	5,92	3,43	9,88	5,71	3,29	940	77,7	0,69	1,9	2,3	22,64	1,8	4,8	64	0,013950
T1A 132S-6	3	13,8	7,95	4,59	13,12	7,55	4,37	12,6	7,28	4,20	960	79.7	0,72	1,9	2,5	30,64	1,4	5,7	64	0,030457
T1A 132M1-6	4	17,7	10,23	5,91	16,9	9,72	5,63	16,2	9,37	5,41	960	81.4	0,73	2	2,6	40,64	1,5	5,9	68	0,037251
T1A 132M2-6	5,5	23,9	13,8	7,96	22,76	13,09	7,59	21,9	12,6	7,28	960	83.1	0,73	2,1	2,7	55,87	1,6	6,2	68	0,048966
T1A 160M-6	7,5	31,1	17,9	10,4	29,5	17,0	9,84	28,4	16,4	9,48	965	84,7	0,75	2,4	2,9	74,25	1,7	6,7	68	0,086226
T1A 160L-6	11	43,5	25,1	14,5	41,3	23,9	13,8	39,8	23,0	13,3	965	86,4	0,77	2,5	2,7	108,91	1,5	6,9	73	0,116874
T1A 180L-6	15	54,6	31,6	18,2	54,2	31,25	18,1	50,1	28,9	16,7	955	87,7	0,79	2,3	2,7	149,99	2	7,2	75	0,254063
T1A 200L1-6	18,5	66,6	38,6	22,2	63,3	36,31	21,1	61,0	35,3	20,3	960	88,6	0,83	2,3	2,7	184,02	2	6,9	78	0,303941
T1A 200L2-6	22	77,3	44,7	25,8	74,6	42,89	24,9	70,8	41,0	23,6	960	89,2	0,83	2,3	2,6	218,84	2	7,3	78	0,353160

Electrical data (50Hz) - 8 poles

Type	Power (kW)	Current (A)			Current (A)			Current (A)			rpm	Eff. (%)	Power factor (Cosφ)	Cs/ Cn	Cmax/ Cn	Cn (Nm)	Cmin/ Cn	Is/In	dB(A)	PD² Kgm²
		220V	380V	660V	230V	400V	690V	240V	415V	720V										
T1A 801-8	0,18	1,51	0,87	0,50	1,44	0,83	0,48	1,39	0,80	0,46	690	54,8	0,57	2,2	2,4	2,6	2	3	52	0,002021
T1A 802-8	0,25	1,95	1,13	0,65	1,86	1,07	0,62	1,79	1,03	0,60	690	58,2	0,58	2,3	2,4	3,6	2	3,1	52	0,002323
T1A 90S-8	0,37	2,57	1,48	0,86	2,45	1,41	0,82	2,35	1,36	0,78	700	64	0,59	1,9	2,3	5,05	1,7	3,3	56	0,003266
T1A 90L-8	0,55	3,83	2,21	1,28	3,66	2,1	1,22	3,51	2,02	1,17	700	65	0,58	1,9	2,3	7,6	1,7	3,4	56	0,004281
T1A 100L1-8	0,75	4,69	2,71	1,56	4,47	2,57	1,49	4,29	2,48	1,43	700	68	0,62	1,9	1,8	10,4	2,2	3,6	59	0,006346
T1A 100L2-8	1,1	6,67	3,85	2,22	6,36	3,66	2,12	6,11	3,53	2,04	700	70	0,62	1,9	2,1	15,2	1,8	3,5	59	0,008340
T1A 112M-8	1,5	9,23	5,33	3,08	8,8	5,06	2,93	8,45	4,88	2,82	700	72,5	0,59	1,8	2,3	20,5	1,8	4	61	0,013950
T1A 132S-8	2,2	12,5	7,21	4,16	11,91	6,85	3,97	11,44	6,60	3,81	710	78,6	0,59	1,9	2,4	29,8	1,7	4,9	64	0,032131
T1A 132M-8	3	16,4	9,45	5,46	15,61	8,98	5,2	15,0	8,66	5,00	710	80,4	0,6	2	2,5	40,4	1,8	5,1	64	0,040598
T1A 160M1-8	4	18,3	10,6	6,11	17,4	10,1	5,81	16,8	9,70	5,60	715	82	0,7	1,8	2,3	53,8	1,6	4,6	68	0,071036
T1A 160M2-8	5,5	24,8	14,3	8,25	23,5	13,6	7,84	22,7	13,1	7,56	710	83,5	0,7	1,9	2,4	73	1,8	4,8	68	0,086226
T1A 160L-8	7,5	33,0	19,0	11,0	31,3	18,1	10,4	30,2	17,4	10,1	715	85,5	0,7	2,5	2,8	100	2	5,7	68	0,113076
T1A 180L-8	11	45,2	26,2	15,1	26,3	24	13,2	41,5	24,0	13,8	730	86	0,76	2,1	2,2	144	1,8	5,1	70	0,261094
T1A 200L-8	15	58,9	34,1	19,6	57,4	33	18,6	54,0	31,2	18,0	730	87	0,76	2,1	2,2	196	1,8	5,3	70	0,339098

35. TA SERIES – Three-Phase Asynchronous single speed motors

Electrical data (50Hz) Efficiency IE2 - 2 poles

Type	Power (kW)	Current (A)			Current (A)			Current (A)			rpm	Eff. (%)	Power factor (Cosφ)	Cs/ Cn	Cmax/ Cn	Cn (Nm)	Cmin/ Cn	Is/In	dB(A)	PD² Kgm²
		220V	380V	660V	230V	400V	690V	240V	415V	720V										
T2A 801-2	0,75	3,15	1,82	1,05	3,00	1,73	1,00	2,88	1,66	0,96	2840	77,4	0,81	2,6	2,8	2,51	2,2	6,1	67	0,000896
T2A 802-2	1,1	4,43	2,56	1,48	4,21	2,43	1,40	4,06	2,34	1,35	2880	79,6	0,82	2,6	2,6	3,69	1,8	7	67	0,001124
T2A 90S-2	1,5	5,83	3,37	1,94	5,55	3,20	1,85	5,34	3,08	1,78	2880	81.3	0.83	2,8	3	5,02	2	7,2	72	0,001856
T2A 90L1-2	2,2	8,28	4,78	2,76	7,87	4,54	2,63	7,58	4,38	2,53	2880	83.2	0.84	2,8	3,1	7,38	1,4	7,6	72	0,002306
T2A 100L1-2	3	11,1	6,41	3,70	10,55	6,09	3,51	10,17	5,87	3,39	2890	84.6	0.84	3,1	3,5	10,05	2,6	8,8	76	0,004131
T2A 112M1-2	4	13,8	7,96	4,60	13,09	7,56	4,36	12,6	7,29	4,21	2910	85,8	0,89	3,3	3,6	13,13	2	9,6	77	0,006311
T2A 132S1-2	5,5	18,7	10,8	6,23	17,75	10,25	5,92	17,1	9,9	5,70	2910	87	0,89	2,4	3,4	18,08	1,9	8,3	80	0,013319
T2A 132S2-2	7,5	25,2	14,5	8,39	23,9	13,8	7,97	23,0	13,3	7,68	2920	88,1	0,89	3,1	3,7	24,61	2	10,3	80	0,016473
T2A 160M1-2	11	36,0	20,8	12,0	34,17	19,73	11,39	32,9	19,0	11,0	2950	89,4	0,9	2,6	3,4	35,97	1,5	8,4	86	0,050092
T2A 160M2-2	15	49,04	28,3	16,3	46,6	26,9	15,6	44,9	25,9	15,0	2960	90,3	0,89	2,6	3,4	49,09	1,8	9,4	86	0,065326
T2A 160L1-2	18,5	59,5	34,4	19,8	56,5	32,6	18,8	54,5	31,5	18,2	2950	90,9	0,9	2,6	3,2	60,46	1,8	9,4	86	0,077018
T2A 180M-2	22	71,1	41,1	23,7	68,0	39,08	22,7	65,2	37,7	21,7	2930	91,3	0,89	2,3	2,8	71,70	2	7,5	86	0,095016
T2A 200L1-2	30	97,2	56,3	32,4	93,0	53,49	31,0	89,1	51,6	29,7	2925	92	0,88	2,4	2,7	97,94	2	6,7	86	0,122246
T2A 200L2-2	37	116,7	67,5	38,9	111,6	64,15	37,2	107,0	61,8	35,6	2930	92,5	0,90	2,3	2,7	120,59	2	6,3	86	0,148816

Electrical data (50Hz) Efficiency IE2 - 4 poles

Type	Power (kW)	Current (A)			Current (A)			Current (A)			rpm	Eff. (%)	Power factor (Cosφ)	Cs/ Cn	Cmax/ Cn	Cn (Nm)	Cmin/ Cn	Is/In	dB(A)	PD² Kgm²
		220V	380V	660V	230V	400V	690V	240V	415V	720V										
T2A 802-4	0,75	3,48	2,01	1,16	3,31	1,91	1,10	3,19	1,84	1,06	1430	79,6	0,71	2,7	2,9	5,40	2,4	5,7	58	0,001928
T2A 90S-4	1,1	4,94	2,85	1,65	4,69	2,71	1,56	4,52	2,61	1,51	1430	81,4	0,72	2,9	3,1	7,30	2,2	6,8	61	0,003342
T2A 90L1-4	1,5	6,44	3,72	2,15	6,12	3,53	2,04	5,90	3,41	1,97	1430	82,8	0,74	3,1	3,2	9,95	2,2	6,5	61	0,004185
T2A 100L1-4	2,2	8,38	4,84	2,79	7,95	4,59	2,65	7,67	4,43	2,56	1440	84,3	0,82	2,4	2,9	14,59	2	6,6	64	0,007765
T2A 100L2-4	3	11,5	6,66	3,85	10,96	6,33	3,65	10,6	6,10	3,52	1440	85,5	0,8	2,3	3,2	20,32	2,4	7,6	64	0,009743
T2A 112M1-4	4	14,8	8,56	4,94	14,0	8,13	4,69	13,6	7,84	4,52	1440	86,6	0,82	2,5	3,3	26,62	2,3	7,9	65	0,013744
T2A 132S-4	5,5	19,9	11,5	6,63	18,88	10,9	6,29	18,2	10,5	6,07	1460	87,7	0,83	2,1	3,5	36,73	1,9	8,6	71	0,030593
T2A 132M-4	7,5	26,7	15,5	8,9	25,46	14,70	8,48	24,5	14,2	8,2	1460	88,7	0,83	2,3	2,7	50,08	2	7,8	71	0,035864
T2A 160M-4	11	38,8	22,4	12,9	36,9	21,3	12,3	35,6	20,5	11,9	1460	89,8	0,83	2,5	2,7	72,95	1,7	7	75	0,089674
T2A 160L1-4	15	51,9	29,9	17,3	49,3	28,4	16,4	47,5	27,4	15,8	1465	90,6	0,84	2,5	2,8	99,13	1,6	8,3	75	0,118199
T2A 180M-4	18,5	61,2	35,4	20,4	58,5	33,66	19,5	56,1	32,4	18,8	1445	91,2	0,87	2,4	3	122,26	2,1	7,8	80	0,155064
T2A 180L-4	22	70,8	41,0	23,6	67,7	38,95	22,6	64,9	37,5	21,8	1460	91,6	0,89	2,3	3	143,89	2	7,5	80	0,173293
T2A 200L-4	30	96,9	56,1	32,3	92,7	53,31	30,9	88,9	51,4	29,8	1460	92,3	0,88	2,4	2,7	196,22	2	7,9	83	0,242313

Electrical data (50Hz) Efficiency IE2 - 6 poles

Type	Power (kW)	Current (A)			Current (A)			Current (A)			rpm	Eff. (%)	Power factor (Cosφ)	Cs/ Cn	Cmax/ Cn	Cn (Nm)	Cmin/ Cn	Is/In	dB(A)	PD^2 Kgm^2
		220V	380V	660V	230V	400V	690V	240V	415V	720V										
T2A 803-6	0,75	4,01	2,32	1,34	3,90	2,20	1,27	3,67	2,12	1,22	930	75,9	0,64	2,7	2,6	7,66	2,5	4,2	58	0,003079
T2A 90L-6	1,1	5,37	3,10	1,79	5,10	2,95	1,70	4,92	2,84	1,64	940	78,1	0,69	2	2,4	11,23	1,8	4,9	59	0,004884
T2A 100L-6	1,5	6,67	3,85	2,22	6,35	3,66	2,11	6,11	3,53	2,04	940	79,8	0,74	1,7	2,2	15,24	1,6	4,8	61	0,008340
T2A 112M-6	2,2	9,83	5,67	3,28	9,34	5,39	3,11	9,00	5,20	3,00	955	81,8	0,72	2,1	2,7	22,35	1,8	5,5	64	0,015440
T2A 132S-6	3	12,5	7,23	4,18	11,9	6,87	3,96	11,5	6,62	3,82	960	83,3	0,75	1,6	2,4	30,48	1,5	5,6	64	0,032131
T2A 132M1-6	4	16,8	9,71	5,61	16,0	9,22	5,33	15,4	8,89	5,13	960	84,6	0,74	2	2,6	40,42	1,6	5,9	68	0,038925
T2A 132M2-6	5,5	22,7	13,1	7,58	21,6	12,5	7,2	20,8	12,0	6,94	960	86	0,74	2,4	2,6	55,58	1,8	6,6	68	0,048966
T2A 160M-6	7,5	29,4	17,0	9,80	27,9	16,1	9,31	26,9	15,5	8,97	965	87,2	0,77	2,5	2,9	74,99	1,8	6,9	68	0,093821
T2A 160L-6	11	42,9	24,8	14,3	40,8	23,6	13,6	39,3	22,7	13,1	970	88,7	0,76	2,2	2,3	109,42	1,3	6,5	73	0,128267
T2A 180L-6	15	53,0	30,6	17,6	50,6	29,08	16,9	48,5	28,0	16,2	960	89,7	0,83	2,3	2,9	149,21	2,1	7,8	79	0,254063
T2A 200L1-6	18,5	63,4	36,6	21,1	60,4	34,75	20,1	57,9	33,5	19,3	965	90,4	0,85	2,4	3,2	183,07	2,1	7,8	82	0,303941
T2A 200L2-6	22	74,1	42,8	24,6	70,6	40,62	23,5	67,7	39,2	22,6	965	90,9	0,86	2,3	3,1	217,70	1,9	7,9	82	0,353160

SIMOTOP® GROUP

35. TA SERIES – Three-Phase Asynchronous single speed motors

Electrical data (50Hz) Efficiency IE3 - 2 poles

Type	Power (kW)	Current (A)			Current (A)			Current (A)			rpm	Eff. (%)	Power factor (Cosφ)	Cs/ Cn	Cmax/ Cn	Cn (Nm)	Cmin/ Cn	Is/In	dB(A)	PD² Kgm²
		220V	380V	660V	230V	400V	690V	240V	415V	720V										
T3A 801-2	0,75	3,10	1,79	1,03	2,9	1,7	1.0	2,84	1,64	0,95	2890	80,7	0,81	3,1	3,2	2,51	2,3	7,4	67	0,000972
T3A 802-2	1,1	4,38	2,53	1,46	4,1	2,4	1.4	4,01	2,31	1,34	2890	82,7	0,82	3,4	3,4	3,69	2	8,7	67	0,001275
T3A 90S-2	1,5	5,65	3,26	1,88	5,5	3,1	1,8	5,18	2,99	1,73	2900	84,2	0,82	3,5	3,7	5,02	2,1	8,3	72	0,002186
T3A 90L1-2	2,2	8,02	4,63	2,67	7,6	4,4	2,6	7,35	4,24	2,45	2910	85,9	0,84	3,1	3,5	7,38	2,2	8,1	72	0,002636
T3A 100L1-2	3	10,4	6,00	3,46	9,8	5,7	3,3	9,52	5,49	3,17	2910	87,1	0,88	3,2	3,6	10,05	2,6	9,4	76	0,004842
T3A 112M1-2	4	13,3	7,68	4,44	12,7	7,30	4,20	12,2	7,04	4,06	2920	88,1	0,9	3,4	3,9	13,13	2,4	10,5	77	0,007505
T3A 132S1-2	5,5	18,2	10,5	6,08	17,4	10,0	5,80	16,7	9,64	5,56	2930	89,2	0,89	3,2	4	18,08	2,5	10	80	0,015212
T3A 132S2-2	7,5	24,3	14,1	8,11	23,2	13,4	7,7	22,3	12,9	7,43	2930	90,1	0,9	3,6	4,7	24,61	2,4	11,9	80	0,018996
T3A 160M1-2	11	36,3	20,9	12,1	34,4	19,9	11,5	33,2	19,2	11,1	2955	91,2	0,88	3,2	4	35,97	1,4	10,3	86	0,059613
T3A 160M2-2	15	48,3	27,9	16,1	45,8	26,5	15,3	44,2	25,5	14,7	2960	91,9	0,89	3,9	4,2	49,09	1,4	11,4	86	0,076751
T3A 160L1-2	18,5	57,8	33,4	19,3	54,9	31,7	18,3	52,9	30,6	17,6	2950	92,4	0,91	3	3	60,46	1,5	9,1	86	0,092252
T3A 180M-2	22	68,6	39,6	22,9	65,2	37,6	21,7	62,8	36,3	20,9	2960	92,7	0,91	2,7	3,3	71,70	1,7	9	91	0,104677
T3A 200L1-2	30	94,0	54,3	31,3	89,3	51,6	29,8	86,1	49,7	28,7	2960	93,3	0,9	3,5	3,8	97,94	1,8	10,2	94	0,136738
T3A 200L2-2	37	115,5	66,7	38,4	110,1	63,33	36,7	105,6	61,0	35,2	2930	93,7	0,90	2,3	2,7	120,59	2	6,3	94	0,139543

Electrical data (50Hz) Efficiency IE3 - 4 poles

Type	Power (kW)	Current (A)			Current (A)			Current (A)			rpm	Eff. (%)	Power factor (Cosφ)	Cs/ Cn	Cmax/ Cn	Cn (Nm)	Cmin/ Cn	Is/In	dB(A)	PD² Kgm²
		220V	380V	660V	230V	400V	690V	240V	415V	720V										
T3A 802-4	0,75	3,46	2,00	1,15	3,3	1,9	1,1	3,17	1,83	1,06	1430	82,5	0,7	3,1	3,1	5,04	2,5	6,3	58	0,002285
T3A 90S-4	1,1	4,74	2,74	1,58	4,6	2,6	1,5	4,34	2,51	1,45	1440	84,1	0,72	4	3,4	7,37	2,5	7,1	61	0,003842
T3A 90L1-4	1,5	6,56	3,79	2,19	6,2	3,6	2,1	6,01	3,47	2,00	1440	85,3	0,71	3,4	3,3	10,09	2,8	7,1	61	0,004685
T3A 100L1-4	2,2	8,20	4,74	2,73	7,8	4,5	2,6	7,51	4,34	2,50	1450	86,7	0,82	2,8	3,3	14,69	2,3	7,9	64	0,008754
T3A 100L2-4	3	11,7	6,74	3,89	11,0	6,4	3,70	10,7	6,17	3,56	1450	87,7	0,78	3,3	3,4	20,03	2,7	8,1	64	0,011063
T3A 112M1-4	4	14,5	8,37	4,83	13,8	8	4,6	13,3	7,66	4,42	1450	88,6	0,82	3,1	3,7	26,62	2,6	8,6	65	0,015292
T3A 132S-4	5,5	19,3	11,2	6,44	18,4	10,6	6,1	17,7	10,2	5,90	1460	89,6	0,84	2,3	3,5	36,73	1,9	9	71	0,034464
T3A 132M1-4	7,5	25,7	14,8	8,57	24,5	14,1	8,20	23,5	13,6	7,85	1460	90,4	0,85	2,6	3,4	50,08	2,2	8,9	71	0,043597
T3A 160M-4	11	37,1	21,5	12,4	35,5	20,40	11,8	34,0	19,7	11,4	1460	91,4	0,85	2,5	2,8	72,95	2,1	7,9	73	0,089674
T3A 160L1-4	15	49,8	28,7	16,6	47,3	27,3	15,8	45,6	26,3	15,2	1460	92,1	0,86	3	3	99,13	2	9,2	75	0,137038
T3A 180M-4	18,5	61,1	35,3	20,4	58,1	33,5	19,4	56,0	32,3	18,7	1470	92,6	0,86	2,8	3,3	122,26	1,9	8,8	80	0,173293
T3A 180L-4	22	72,4	41,8	24,1	68,8	39,7	22,9	66,3	38,3	22,1	1470	93	0,86	3	3,5	143,89	2,1	9,3	80	0,200637
T3A 200L-4	30	95,8	55,3	32,0	91,1	52,6	30,4	87,8	50,7	29,3	1470	93,6	0,88	3,2	3,7	196,22	2,1	9,7	83	0,265100

Electrical data (50Hz) Efficiency IE3 - 6 poles

Type	Power (kW)	Current (A)			Current (A)			Current (A)			rpm	Eff. (%)	Power factor (Cosφ)	Cs/ Cn	Cmax/ Cn	Cn (Nm)	Cmin/ Cn	Is/In	dB(A)	PD^2 Kgm^2
		220V	380V	660V	230V	400V	690V	240V	415V	720V										
T3A 90S-6	0,75	3,83	2,21	1,28	3,6	2,1	1,2	3,51	2,02	1,17	945	78,9	0,67	2,3	2,6	7,66	2,1	4,7	59	0,004070
T3A 90L-6	1,1	5,29	3,05	1,76	5,1	2,9	1,7	4,84	2,80	1,61	950	81.0	0,67	2,7	2,9	11,23	2,5	5,2	59	0,005487
T3A 100L-6	1,5	6,74	3,89	2,25	6,4	3,7	2,1	6,17	3,56	2,06	950	82,5	0,71	2,4	2,9	15,24	2,2	5,5	61	0,009137
T3A 112M-6	2,2	9,7	5,58	3,22	9,10	5,30	3,0	8,85	5,11	2,95	960	84,3	0,72	2	2,5	22,35	1,8	5,5	64	0,017675
T3A 132S-6	3	12,6	7,26	4,19	11,9	6,90	4,00	11,5	6,65	3,84	965	85,6	0,74	2	2,7	30,48	1,7	6	64	0,033804
T3A 132M1-6	4	16,4	9,46	5,46	15,6	9	5,2	15,0	8,66	5,00	970	86,8	0,74	2,3	3	40,42	1,8	6,8	68	0,043946
T3A 132M2-6	5,5	22,1	12,7	7,35	20,9	12,1	7	20,2	11,7	6,73	970	88.0	0,75	2,9	3,5	55,58	2,2	7,4	68	0,053987
T3A 160M-6	7,5	29,1	16,8	9,72	27,7	16,0	9,24	26,7	15,4	8,90	970	89,1	0,76	2,2	2,9	74,99	1,8	7,3	68	0,109012
T3A 160L-6	11	41,1	23,7	13,7	39,0	22,5	13,0	37,6	21,7	12,5	975	90,3	0,78	2,7	2,9	109,42	1,2	8,4	73	0,154850
T3A 180L-6	15	52,1	30,1	17,4	49,5	28,6	16,5	47,7	27,6	15,9	960	91,2	0,83	2,3	2,9	149,21	2,1	7,8	79	0,275157
T3A 200L1-6	18,5	66,4	38,3	22,1	63,0	36,4	21,0	60,8	35,1	20,3	980	91,7	0,8	2,7	3,7	183,07	2,2	9,8	82	0,332066
T3A 200L2-6	22	78,5	45,3	26,2	74,6	43,1	24,9	71,9	41,5	24,0	980	92,2	0,8	2,9	3,7	217,70	2,3	10,5	82	0,388316

SIMOTOP® GROUP

35. TA SERIES – Three-Phase Asynchronous single speed motors

Electrical data (50Hz) Efficiency IE4 - 2 poles

Type	Power (kW)	Efficiency (%)			Power factor (Cosφ)	Current (A)			rpm	Cn (Nm)	Cs/Cn	Cmax/Cn	Cmin/Cn	Is/In	dB(A)	PD² Kg/m²
		100%	75%	50%		230V	400V	690V								
T4A631-2	0,18	70,8	68,8	63,6	0,75	0,85	0,49	0,28	2870	0,6240	2,6	2,9	2	5,5	61	0,000245
T4A632-2	0,25	74,3	73,1	68,7	0,77	1,10	0,63	0,37	2880	0,8637	2,7	3,2	2,4	6,3	61	0,000303
T4A711-2	0,37	78,1	77,3	73,4	0,78	1,52	0,88	0,51	2890	1,2739	2,8	3,3	2,3	6,7	64	0,000421
T4A712-2	0,55	81,5	81,1	77,9	0,79	2,14	1,23	0,71	2890	1,8936	2,9	3,5	2,5	6,8	64	0,000569
T4A801-2	0,75	83,5	83,6	81,5	0,8	2,82	1,62	0,94	2900	2,5733	3,7	3,9	2,5	8,8	67	0,001124
T4A802-2	1,1	85,2	85,2	83,3	0,82	3,95	2,27	1,32	2910	3,7612	4	4,2	2,6	10	67	0,001508
T4A90S-2	1,5	86,5	86,5	84,6	0,81	5,37	3,09	1,79	2910	5,1289	3,6	2,8	4	9,6	72	0,002296
T4A90L-2	2,2	88	88,2	86,9	0,83	7,56	4,35	2,52	2900	7,5483	4	4,2	3	10,5	72	0,003086
T4A100L-2	3	89,1	89,4	88,4	0,9	9,39	5,4	3,13	2910	10,258	3,7	2,9	3,9	11	76	0,005939
T4A112M-2	4	90	90,4	89,7	0,91	12,3	7,05	4,09	2920	13,630	3,5	2,6	3,9	10,5	77	0,009270
T4A132S1-2	5,5	90,9	90,9	89,5	0,9	17,3	9,93	5,63	2940	18,614	3,4	2,3	4	10,5	80	0,017735
T4A132S2-2	7,5	91,7	91,7	90,7	0,91	23,1	13,3	7,52	2940	25,383	3,8	2,3	4,1	10	80	0,022880
T4A160M1-2	11	92,6	93,2	92,1	0,91	32,6	18,8	10,9	2950	37,102	3,5	2,5	3,8	10	86	0,069134
T4A160M2-2	15	93,3	93,8	92,8	0,92	43,9	25,2	14,6	2960	50,422	3,6	2,5	3,8	10	86	0,090348
T4A160L-2	18,5	93,7	94,2	93,1	0,93	53,3	30,6	17,8	2960	62,188	3,8	2,5	4	10,3	86	0,107485

Electrical data (50Hz) Efficiency IE4 - 4 poles

Type	Power (kW)	Efficiency (%)			Power factor (Cosφ)	Current (A)			rpm	Cn (Nm)	Cs/Cn	Cmax/Cn	Cmin/Cn	Is/In	dB(A)	PD² Kg/m²
		100%	75%	50%		230V	400V	690V								
T4A631-4	0,12	69,8	68,2	66,5	0,66	0,65	0,38	0,22	1400	0,8529	2,3	2,7	2,3	4	52	0,000336
T4A632-4	0,18	74,7	74,1	69,7	0,67	0,90	0,53	0,30	1400	1,2793	2,6	2,8	2,4	4,3	52	0,000430
T4A711-4	0,25	77,9	77	72,9	0,65	1,24	0,71	0,41	1430	1,7395	3	3,4	2,8	5,6	55	0,000841
T4A712-4	0,37	81,1	80,5	77,2	0,66	1,74	1	0,58	1430	2,5745	3,4	3,6	3	6,2	55	0,001188
T4A801-4	0,55	83,9	83,3	80,6	0,67	2,46	1,41	0,82	1440	3,8003	3,4	3,7	3	6,8	57	0,002047
T4A802-4	0,75	85,7	85,3	82,8	0,67	3,28	1,97	1,09	1450	5,1466	3,7	4	3,1	7,3	58	0,002646
T4A90S-4	1,1	87,2	87,1	84,4	0,69	4,59	2,64	1,53	1435	7,6272	4,8	3,8	4,1	8,2	61	0,004685
T4A90L-4	1,5	88,2	88,1	86,1	0,71	6,01	3,46	2,00	1455	10,258	4,8	3,8	4,2	9,2	61	0,005696
T4A100L1-4	2,2	89,5	89,6	88,2	0,76	8,12	4,67	2,71	1460	14,993	3,5	3	4,3	9,5	64	0,010435
T4A100L2-4	3	90,4	89,7	88,1	0,75	11,1	6,41	3,70	1460	20,445	3,8	3,4	4,5	9,5	64	0,013074
T4A112M-4	4	91,1	91	90	0,8	14,0	8,08	4,59	1460	27,260	4	3	4,5	9,8	65	0,019436
T4A132S-4	5,5	91,9	92,2	91,5	0,8	18,8	10,9	6,26	1470	37,228	3,4	2,1	4,1	10	71	0,043597
T4A132M-4	7,5	92,6	92,8	92,2	0,81	25,1	13,9	8,37	1470	50,765	4,4	2,2	4	10,2	71	0,055210
T4A160M-4	11	93,3	93,5	92,8	0,82	36,1	20,7	12,0	1475	74,203	2,8	2,2	3,2	9,1	75	0,127619
T4A160L-4	15	93,9	94,1	93,7	0,83	48,3	27,9	16,1	1475	101,19	3,2	2,2	3,5	9,2	75	0,165297

Electrical data (50Hz) Efficiency IE4 - 6 poles

Type	Power (kW)	Efficiency (%)			Power factor (Cosφ)	Current (A)			rpm	Cn (Nm)	Cs/Cn	Cmax/Cn	Cmin/Cn	Is/In	dB(A)	PD² Kg/m²
		100%	75%	50%		230V	400V	690V								
T4A711-6	0,18	70,1	66,8	60,2	0,6	1,07	0,62	0,36	940	1,9053	2,7	2,3	2,9	4,1	52	0,001020
T4A712-6	0,25	74,1	71,5	65,3	0,6	1,41	0,81	0,47	940	2,6463	2,8	2,4	2,9	4,5	52	0,001250
T4A801-6	0,37	78	76,7	72,2	0,61	1,95	1,12	0,65	950	3,8753	2,7	3,1	2,5	4,8	56	0,002634
T4A802-6	0,55	80,9	80	76,3	0,61	2,80	1,61	0,93	950	5,7605	3,2	3,5	2,8	5,3	56	0,003677
T4A90S-6	0,75	82,7	81,6	77,7	0,63	3,61	2,08	1,20	960	7,7734	2,8	2,4	3,2	5,7	59	0,004683
T4A90L-6	1,1	84,5	83,5	80,5	0,65	5,03	2,89	1,68	960	11,401	3,1	2,5	3,3	5,9	59	0,006503
T4A100L-6	1,5	85,9	86,2	84,5	0,72	6,09	3,5	2,03	965	15,466	2,7	1,9	3	6,5	61	0,012757
T4A112M-6	2,2	87,4	87,2	85,4	0,69	9,16	4,98	3,05	970	22,567	3	2,6	3,8	7,5	64	0,022890
T4A132S-6	3	88,6	88,7	87,4	0,71	12,0	6,88	3,99	975	30,615	2,5	1,9	3,2	7,1	64	0,043846
T4A132M1-6	4	89,5	89,8	88,8	0,74	15,2	8,72	5,05	975	40,821	2,8	1,8	3,4	8	68	0,053987
T4A132M2-6	5,5	90,5	90,7	89,7	0,75	20,3	11,7	6,78	975	56,128	3,3	1,8	3,3	8,2	68	0,070723
T4A160M-6	7,5	91,3	91,5	90,3	0,77	26,7	15,4	8,89	980	76,148	3,3	1,8	3,3	8,5	68	0,128267
T4A160L-6	11	92,3	92,6	91,2	0,77	38,9	22,3	12,9	980	111,68	3,4	1,8	3,4	8,5	73	0,185230
T4A160M2-2	15	93,3	93,8	92,8	0,92	43,9	25,2	14,6	2960	50,422	3,6	2,5	3,8	10	86	0,090348
T4A160L-2	18,5	93,7	94,2	93,1	0,93	53,3	30,6	17,8	2960	62,188	3,8	2,5	4	10,3	86	0,107485

SIMOTOP® GROUP

36. TA SERIES - Weight TA IE1

Frame size	Kw	Weight Kg (*) B3
802-2	1,10	9,8
90S-2	1,50	12,1
90L1-2	2,20	15,3
100L1-2	3,00	19,7
112M-2	4,00	25,6
132S1-2	5,50	40,5
132S2-2	7,50	42,0
160M1-2	11,00	68,8
160M2-2	15,00	80,4
160L-2	18,50	92,2
180M-2	22,00	125,4
200L1-2	30,00	148,0
200L2-2	37,00	165,0

Frame size	Kw	Weight Kg (*) B3
802-4	0,75	9,6
90S-4	1,10	12,1
90L1-4	1,50	17,2
100L1-4	2,20	19,4
100L2-4	3,00	22,6
112M-4	4,00	29,2
132S-4	5,50	42,5
132M-4	7,50	49,0
160M-4	11,00	76,8
160L1-4	15,00	89,2
180M-4	18,5	116,4
180L-4	22	127,4
200L-4	30	149,9

(*) Weights are indicative may vary by changing the materials used,
Simotop Group Spa reserves the right to modify this data at any time and without notice.

Frame size	Kw	Weight Kg (*) B3
802-6	0,55	9,1
90S-6	0,75	11,6
90L-6	1,10	14,2
100L-6	1,50	18,3
112M-6	2,20	24,8
132S-6	3,00	35,7
132M1-6	4,00	41,4
132M2-6	5,50	50,4
160M-6	7,50	70,0
160L-6	11,00	87,6
180L-6	15	121,5
200L1-6	18,5	138,2
200L2-6	22	154,6

Frame size	Kw	Weight Kg (*) B3
802-8	0,25	9,8
803-8	0,37	12,1
90S-8	0,37	11,4
90L-8	0,55	14,3
100L1-8	0,75	16,9
100L2-8	1,10	20,0
112M-8	1,50	24,9
132S-8	2,20	36,6
132M-8	3,00	47,4
160M1-8	4,00	59,8
160M2-8	5,50	69,0
160L-8	7,5	84,8
180l-8	11	128,0
200l-8	15	157,0

(*) Weights are indicative may vary by changing the materials used,
Simotop Group Spa reserves the right to modify this data at any time and without notice.

36. TA SERIES - Weight TA IE2

Frame size	Kw	Weight Kg (*) B3
801-2	0,75	8,2
802-2	1,10	9,5
90S-2	1,50	12,2
90L-2	2,20	15,9
100L-2	3,00	21,3
112M-2	4,00	26,2
132S1-2	5,50	38,9
132S2-2	7,50	44,4
160M1-2	11,00	77,4
160M2-2	15,00	89,2
160L-2	18,50	99,0
180M-2	22,00	126,0
200L1-2	30,00	152,9
200L2-2	37,00	167,7

Frame size	Kw	Weight Kg (*) B3
802-4	0,75	10,2
90S-4	1,10	13,6
90L-4	1,50	16,1
100L1-4	2,20	21,8
100L2-4	3,00	25,4
112M-4	4,00	29,6
132S-4	5,50	44,5
132M-4	7,50	51,1
160M-4	11,00	78,4
160L-4	15,00	101,1
180M-4	18,5	116,6
180L-4	22	124,5
200L-4	30	164,6

(*) Weights are indicative may vary by changing the materials used,
Simotop Group Spa reserves the right to modify this data at any time and without notice.

Frame size	Kw	Weight Kg (*) B3
90S-6	0,75	12,3
90L-6	1,10	15,5
100L-6	1,50	18,5
112M-6	2,20	25,9
132S-6	3,00	36,3
132M1-6	4,00	42,9
132M2-6	5,50	50,8
160M-6	7,50	72,5
160L-6	11,00	89,1
180L-6	15	120,7
200L1-6	18,5	141,0
200L2-6	22	156,8

(*) Weights are indicative may vary by changing the materials used,
Simotop Group Spa reserves the right to modify this data at any time and without notice.

SIMOTOP® GROUP

36. TA SERIES - Weight TA IE3

Frame size	Kw	Weight Kg (*) B3
801-2	0,75	8,6
802-2	1,1	10,3
90S-2	1,5	13,7
90L-2	2,2	17,6
100L-2	3	23,4
112M-2	4	28,5
132S1-2	5,5	40,6
132S2-2	7,5	48,1
160M1-2	11	80,8
160M2-2	15	91,7
160L-2	18,5	102,6
180M-2	22	128,0
200L1-2	30	154,8
200L2-2	37	169,6

Frame size	Kw	Weight Kg (*) B3
802-4	0,75	11,4
90S-4	1,1	14,2
90L-4	1,5	17,0
100L1-4	2,2	26,7
100L2-4	3	27,7
112M-4	4	31,7
132S-4	5,5	46,2
132M-4	7,5	53,0
160M-4	11	79,2
160L-4	15	103,0
180M-4	18,5	118,6
180L-4	22	126,4
200L-4	30	166,6

(*) Weights are indicative may vary by changing the materials used,
Simotop Group Spa reserves the right to modify this data at any time and without notice.

Frame size	Kw	Weight Kg (*) B3
90S-6	0,75	13,2
90L-6	1,1	16,4
100L-6	1,5	19,3
112M-6	2,2	26,4
132S-6	3	37,0
132M1-6	4	43,8
132M2-6	5,5	51,7
160M-6	7,5	73,3
160L-6	11	91,4
180L-6	15	122,7
200L1-6	18,5	143,0
200L2-6	22	158,3

(*) Weights are indicative may vary by changing the materials used,
Simotop Group Spa reserves the right to modify this data at any time and without notice.

SIMOTOP® GROUP

36. TA SERIES - Weight TA IE4

Type	Kw	Weight Kg (*) B3
631-2	0,18	3,8
632-2	0,25	4,5
711-2	0,37	5,7
712-2	0,55	6,7
801-2	0,75	9,0
802-2	1,1	10,6
90S-2	1,5	14,0
90L-2	2,2	18,0
100L-2	3	24,1
112M-2	4	29,2
132S1-2	5,5	41,3
132S2-2	7,5	49,2
160M1-2	11	89,3
160M2-2	15	93,1
160L-2	18,5	105,7

Type	Kw	Weight Kg (*) B3
631-4	0,12	4,00
632-4	0,18	4,80
711-4	0,25	6,50
712-4	0,37	8,00
801-4	0,55	11,00
802-4	0,75	11,80
90S-4	1,1	14,80
90L-4	1,5	17,50
100L1-4	2,2	27,00
100L2-4	3	30,10
112M-4	4	32,30
132S-4	5,5	47,10
132M-4	7,5	54,10
160M-4	11	81,00
160L-4	15	108,30

(*) Weights are indicative may vary by changing the materials used,
Simotop Group Spa reserves the right to modify this data at any time and without notice.

Type	Kw	Weight Kg (*) B3
711-6	0,18	6,3
712-6	0,25	7,4
801-6	0,37	11
802-6	0,55	14
90S-6	0,75	13,6
90L-6	1,1	16,9
100L-6	1,5	20,1
112M-6	2,2	27,1
132S-6	3	38,6
132M1-6	4	45,1
132M2-6	5,5	52,8
160M-6	7,5	75,2
160L-6	11	93,8

(*) Weights are indicative may vary by changing the materials used,
Simotop Group Spa reserves the right to modify this data at any time and without notice.

SIMOTOP® GROUP

37. TA SERIES - Overall and Installation dimensions

Measures in mm

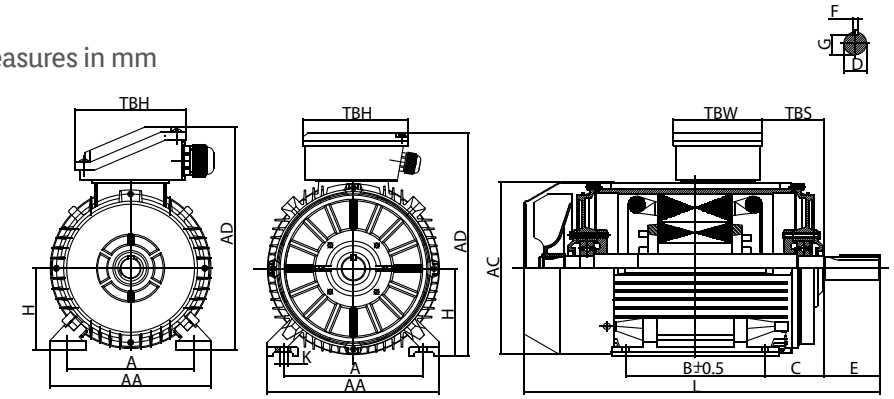

IM B3

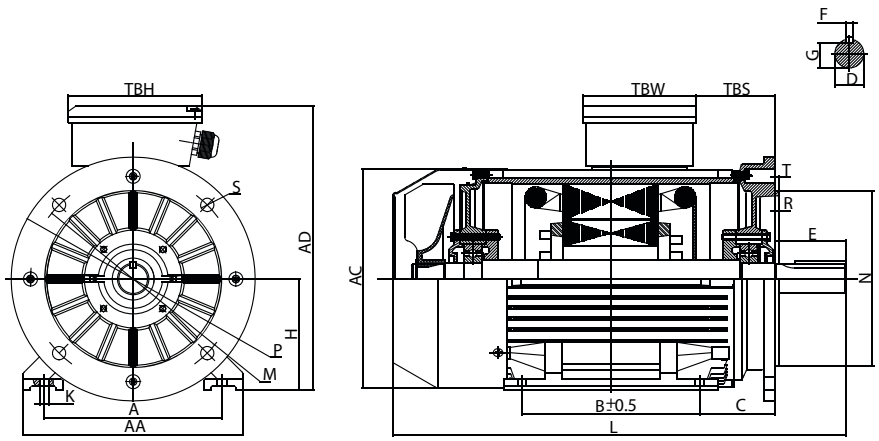

IM B3/B5

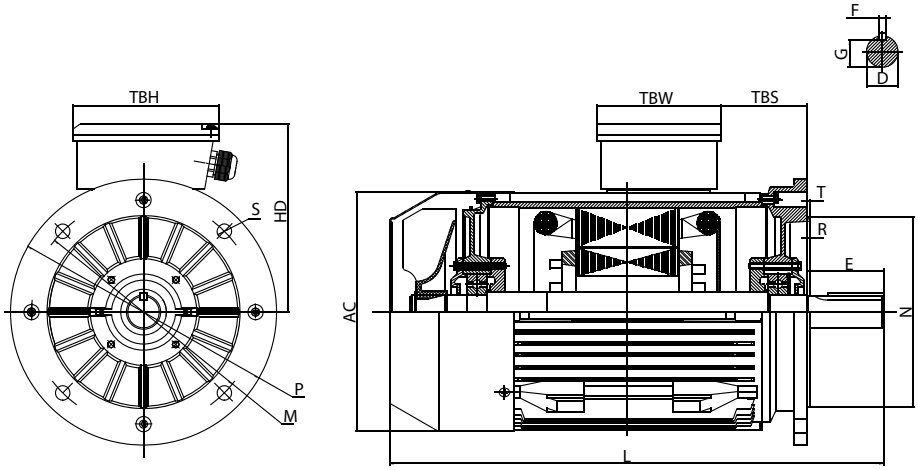

IM B5

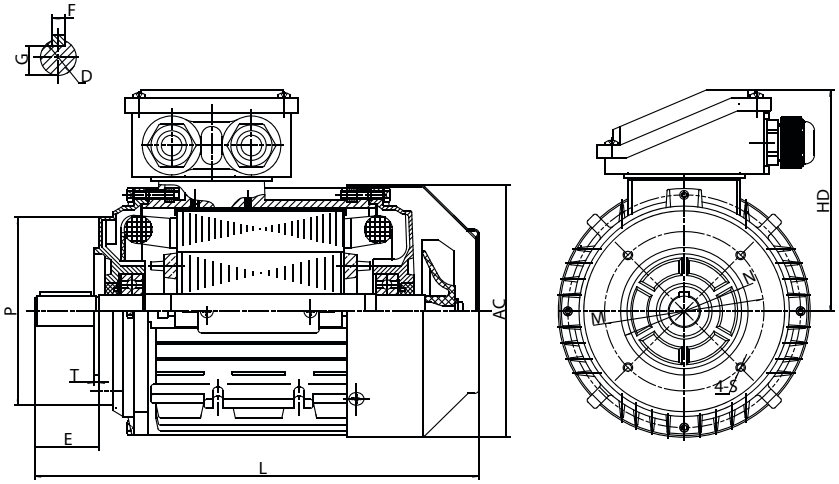

IM B14

Frame size	B3				Shaft					General							
	H	A	B	C	D	E	F	G	K	AA	AD	HD	AC	L	TBS	TBW	TBH
80	80	125	100	50	Ø19	40	6	15.5	Ø9	160	220	140	158	280	16	97	97
90S/L	90	140	100/125	56	Ø24	50	8	20	Ø10	175	240	150	176	312/337	16	97	97
100	100	160	140	63	Ø28	60	8	24	Ø12	200	265	165	199	380	20	118	118
112	112	190	140	70	Ø28	60	8	24	Ø12	230	291	179	220	405	29	118	118
132S/M	132	216	140/178	89	Ø38	80	10	33	Ø12	255	332	200	259	467/505	29	118	118
160M/L	160	254	210/254	108	Ø42	110	12	37	Ø15	314	402	242	313	605/650	91	162	187
180M/L	180	279	241/279	121	Ø48	110	14	42.5	Ø15	348	439	259	360	687/725	160/180	162	187
200L	200	318	305	133	Ø55	110	16	49	Ø19	388	497	297	399	768	192	186	233

Frame size	B5						B14					
	N	M	P	S	T	R	N	M	P	S	T	R
80	130	165	200	4-Ø12	3.5	0	80	100	120	M6	3	0
90S/L	130	165	200	4-Ø12	3.5	0	95	115	140	M8	3	0
100	180	215	250	4-Ø15	4	0	110	130	160	M8	3.5	0
112	180	215	250	4-Ø15	4	0	110	130	160	M8	3.5	0
132S/M	230	265	300	4-Ø15	4	0	130	165	200	M10	3.5	0
160M/L	250	300	350	4-Ø19	5	0						0
180M/L	250	300	350	4-Ø19	5	0						0
200L	300	350	400	4-Ø19	5	0						0

38. TA SERIES - Exploded view drawings and Spare Parts list

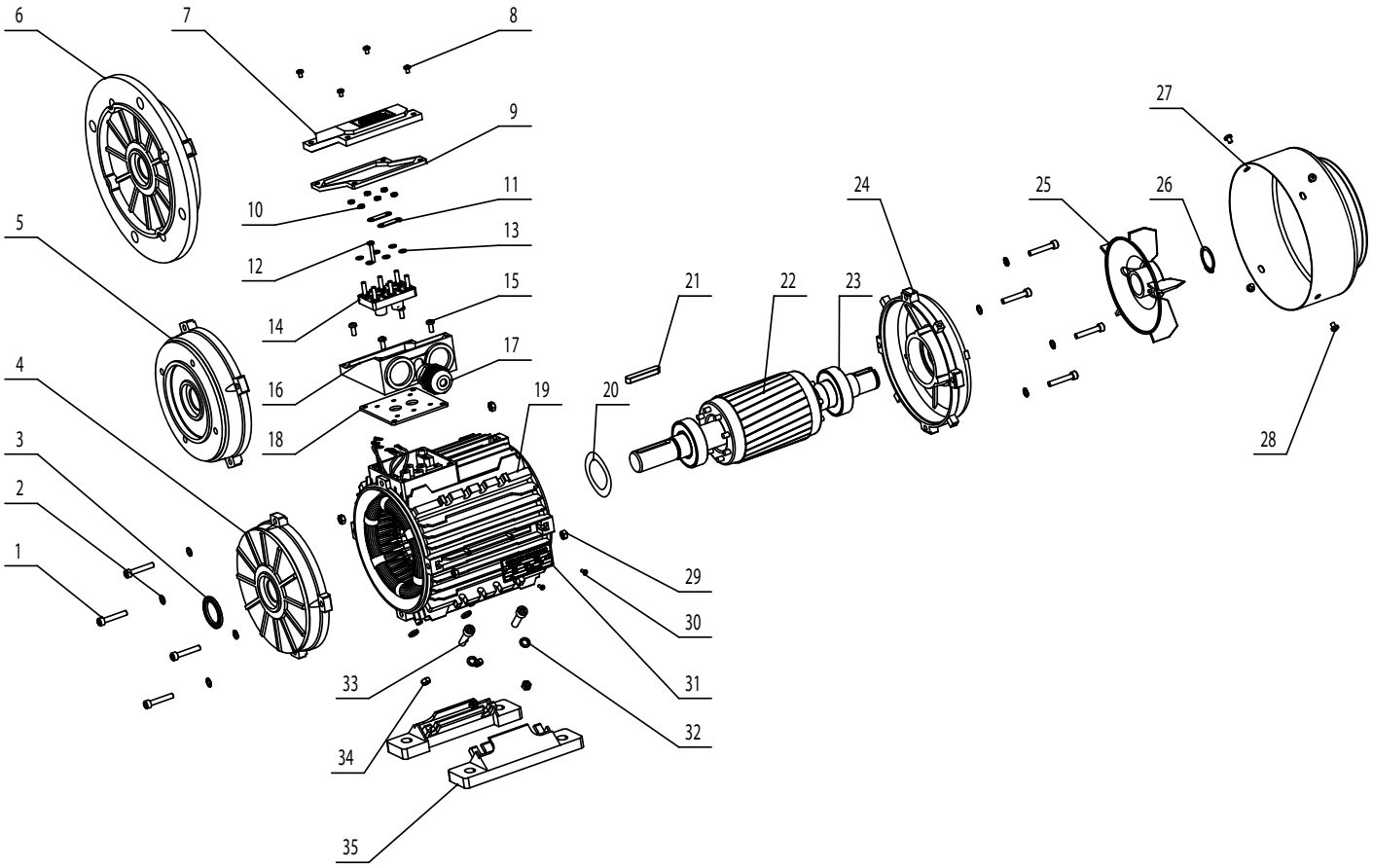

1. Screw
2. Gasket
3. Oil seal
4. DE endshleld
5. B14 Flange
6. B5 Flange
7. Terminal box case
8. Terminal box fixing screws
9. Terminal box upper gasket
10. Terminal box fixing nut
11. Terminal bridge
12. Terminal pin
13. Terminal shim
14. Terminal board
15. Terminal box fixing screws
16. Terminal box case
17. Cable gland
18. Terminal box bottomgaskel
19. Frame
20. Preload washer
21. Key
22. Rotor
23. Bearing
24. NDE endshield
25. Cooling fan
26. Fan circlip
27. Fan cover
28. Fan cover fixing shim
29. Fan cover fixing screws
30. Endshiels fixing nut
31. Rivet
32. Nameplate
33. Foot fixing nut
34. Foot fixing screws
35. Foot

POWER

electric motors
SIMOTOP®
GROUP

TC Series

ELECTRICAL AND MECHANICAL DATA

“ECOL”

CAST IRON HOUSING

39. TC SERIES – Three-Phase Asynchronous single speed motors

Electrical data (50Hz) Efficiency IE1 - 2 poles

Type	Power (kW)	rpm	Current(A) 400V	Eff. (%)	Power factor (Cosφ)	Cn (Nm)	Is/In	Cs/Cn	Cmin./Cn	Cmax/Cn	PD² Kgm²
T1C 132S1-2	5,5	2895	11,16	84,7	0,84	18,14	7,5	2,2	1,8	2,3	0,01106
T1C 132S2-2	7,5	2900	14,81	86	0,85	24,70	7,5	2,2	1,8	2,3	0,01468
T1C 160M1-2	11	2910	20,83	87,6	0,87	36,10	7,5	2,2	1,4	2,3	0,04150
T1C 160M2-2	15	2908	28,06	88,7	0,87	49,26	7,5	2,2	1,4	2,3	0,05384
T1C 160L-2	18,5	2912	33,60	89,3	0,89	60,67	7,5	2,2	1,4	2,3	0,06436
T1C 180M-2	22	2920	39,7	89,9	0,89	71,95	7,5	2,2	1,4	2,3	0,08110
T1C 200L1-2	30	2915	53,6	90,7	0,89	98,3	7,5	2,0	1,4	2,3	0,15138
T1C 200L2-2	37	2920	65,8	91,2	0,89	121,0	7,5	2,0	1,4	2,3	0,17351
T1C 225M-2	45	2920	78,7	91,7	0,90	147,2	7,5	2,0	1,4	2,3	0,24178
T1C 250M-2	55	2930	97,9	92,1	0,88	179,3	7,5	2,0	1,4	2,3	0,38903
T1C 280S-2	75	2930	131,2	92,7	0,89	244,5	7,5	2,0	1,4	2,3	0,69871
T1C 280M-2	90	2930	155,2	93	0,90	293,3	7,5	2,0	1,4	2,3	0,79539
T1C 315S-2	110	2940	189,1	93,3	0,90	357,3	7,1	1,8	1,3	2,2	1,41216
T1C 315M-2	132	2940	223,9	93,5	0,91	428,8	7,1	1,8	1,3	2,2	1,55013
T1C 315L1-2	160	2945	273,6	93,8	0,90	518,8	7,1	1,8	1,3	2,2	1,71199
T1C 315L2-2	200	2945	345,1	94	0,89	648,6	7,1	1,8	1,3	2,2	1,90623
T1C 355M2-2	250	2945	426,5	94	0,90	810,7	7,1	1,6	1,3	2,2	3,14272
T1C 355L2-2	315	2945	543,5	94	0,89	1021,5	7,1	1,6	1,3	2,2	3,85287

Electrical data (50Hz) Efficiency IE1 - 4 poles

Type	Power (kW)	rpm	Current(A) 400V	Eff. (%)	Power factor (Cosφ)	Cn (Nm)	Is/In	Cs/Cn	Cmin./Cn	Cmax/Cn	PD² Kgm²
T1C 132S-4	5,5	1420	11,29	84,7	0,83	36,99	7,5	2,2	1,6	2,6	0,02679
T1C 132M-4	7,5	1420	14,81	86	0,85	50,44	7,5	2,2	1,6	2,6	0,03694
T1C 160M-4	11	1430	21,32	87,6	0,85	73,46	7,5	2,2	1,6	2,6	0,07659
T1C 160L-4	15	1435	27,74	88,7	0,88	99,83	8	2,2	1,6	2,6	0,10379
T1C 180M-4	18,5	1435	33,98	89,3	0,88	123,1	8	2,2	1,6	2,6	0,14084
T1C 180L-4	22	1450	40,6	89,9	0,87	144,9	8	2,2	1,6	2,6	0,16541
T1C 200L-4	30	1450	53,6	90,7	0,89	197,6	8	2,2	1,6	2,6	0,26594
T1C 225S-4	37	1460	65,8	91,2	0,89	242,0	8	2,2	1,3	2,6	0,50439
T1C 225M-4	45	1470	80,5	91,7	0,88	292,3	8	2,2	1,3	2,6	0,57909
T1C 250M-4	55	1470	96,8	92,1	0,89	357,3	8	2,2	1,3	2,6	0,69098
T1C 280S-4	75	1470	132,7	92,7	0,88	487,2	8	2,2	1,3	2,6	1,41285
T1C 280M-4	90	1470	155,2	93	0,90	584,7	8	2,2	1,3	2,6	1,74607
T1C 315S-4	110	1475	189,1	93,3	0,90	712,2	7	2,0	1,3	2,3	2,90486
T1C 315M-4	132	1475	223,9	93,5	0,91	854,6	7	2,0	1,3	2,3	3,29579
T1C 315L1-4	160	1475	270,6	93,8	0,91	1035,9	7	2,0	1,3	2,3	3,73367
T1C 315L2-4	200	1475	341,2	94	0,90	1294,9	7	2,0	1,3	2,3	4,67201
T1C 355M2-4	250	1475	431,3	94	0,89	1618,6	7	2,0	1,3	2,3	7,63820
T1C 355L2-4	315	1475	537,4	94	0,90	2039,5	7	2,0	1,3	2,3	9,08547

Electrical data (50Hz) Efficiency IE1- 6 poles

Type	Power (kW)	rpm	Current(A) 400V	Eff. (%)	Power factor (Cosφ)	Cn (Nm)	Is/In	Cs/Cn	Cmin./Cn	Cmax/Cn	PD² Kgm²
T1C 132S-6	3	935	7,44	79,7	0,73	30,64	6	2,0	1,8	2,2	0,02855
T1C 132M1-6	4	940	9,58	81,4	0,74	40,64	6	2,0	1,8	2,5	0,03601
T1C 132M2-6	5,5	940	12,57	83,1	0,76	55,88	7,5	2,0	1,8	2,5	0,04890
T1C 160M-6	7,5	950	16,8	84,7	0,76	75,4	7,5	2,3	1,8	2,5	0,08726
T1C 160L-6	11	955	23,6	86,4	0,78	110,0	7,5	2,3	1,5	2,5	0,10963
T1C 180L-6	15	955	31,2	87,7	0,79	150,0	7,5	2,3	1,5	2,5	0,24936
T1C 200L1-6	18,5	960	36,3	88,6	0,83	184,0	7,5	2,3	1,5	2,5	0,36147
T1C 200L2-6	22	960	42,9	89,2	0,83	218,9	7,5	2,3	1,5	2,5	0,39445
T1C 225M-6	30	970	57,8	90,2	0,83	295,4	7,5	2,3	1,5	2,5	0,55616
T1C 250M-6	37	970	69,2	90,8	0,85	364,3	7,5	2,3	1,5	2,5	0,96477
T1C 280S-6	45	975	82,6	91,4	0,86	440,8	7,5	2,3	1,5	2,5	1,68116
T1C 280M1-6	55	975	99,3	91,9	0,87	538,7	7,5	2,3	1,5	2,5	1,99928
T1C 315S-6	75	975	131,4	92,6	0,89	734,6	7	2,0	1,3	2,3	3,25976
T1C 315M-6	90	975	155,4	92,9	0,90	881,5	7	2,0	1,3	2,3	3,90933
T1C 315L1-6	110	975	189,1	93,3	0,90	1077,4	7	2,0	1,3	2,3	4,54331
T1C 315L2-6	132	975	229,0	93,5	0,89	1292,9	7	2,0	1,3	2,3	5,44899
T1C 355M1-6	160	975	270,6	93,8	0,91	1567,2	7	2,0	1,3	2,3	8,97637
T1C 355M2-6	200	975	341,2	94	0,90	1959,0	7	2,0	1,3	2,3	11,00175
T1C 355L-6	250	975	431,3	94	0,89	2448,7	7	2,0	1,3	2,3	13,56011

Electrical data (50Hz) - 8 poles

Type	Power (kW)	rpm	Current(A) 400V	Eff. (%)	Power factor (Cosφ)	Cn (Nm)	Is/In	Cs/Cn	Cmin./Cn	Cmax/Cn	PD² Kgm²
T1C 132S-8	2,2	720	6,0	75	0,71	29,2	5,5	2	1,2	2	0,03408
T1C 132M-8	3	720	7,7	77	0,73	39,8	5,5	2	1,2	2	0,04522
T1C 160M1-8	4	730	9,9	80	0,73	52,3	6	1,9	1,2	2,1	0,07620
T1C 160M2-8	5,5	720	12,8	83,5	0,74	73,0	6	2	1,2	2,2	0,09095
T1C 160L-8	7,5	720	17,0	85	0,75	99,5	6	1,9	1,2	2,2	0,10594
T1C 180L-8	11	730	23,7	88	0,76	143,9	6,6	2	1,2	2	0,25695
T1C 200L-8	15	730	31,6	89	0,77	196,2	6,6	2	1,2	2	0,36147
T1C 225S-8	18,5	730	39,0	90	0,76	242,0	6,6	1,9	1,0	2	0,49078
T1C 225M-8	22	740	45,0	90,5	0,78	283,9	6,6	1,9	1,0	2	0,58885
T1C 250M-8	30	740	60,2	91	0,79	387,2	6,6	1,9	1,0	2	1,02008
T1C 280S-8	37	740	73,9	91,5	0,79	477,5	6,6	1,9	1,0	2	1,88979
T1C 280M-8	45	740	89,4	92	0,79	580,7	6,6	1,9	1,0	2	2,26008
T1C 315S-8	55	740	105,6	92,8	0,81	709,8	6,6	1,8	1,0	2	3,89374
T1C 315M-8	75	740	143,7	93	0,81	967,9	6,6	1,8	1,0	2	5,26785
T1C 315L1-8	90	740	168,9	93,8	0,82	1161,5	6,6	1,8	1,0	2	6,26411
T1C 315L2-8	110	740	206,0	94	0,82	1419,6	6,4	1,8	1,0	2	7,44150
T1C 355M1-8	132	740	248,0	93,7	0,82	1703,5	6,4	1,8	1,0	2	8,86978
T1C 355M2-8	160	740	299,0	94,2	0,82	2064,9	6,4	1,8	1,0	2	10,04236
T1C 355L-8	200	740	368,0	94,5	0,83	2581,1	6,4	1,8	1,0	2	12,28093

39. TC SERIES – Three-Phase Asynchronous single speed motors

Electrical data (50Hz) Efficiency IE2 - 2 poles

Type	Power (kW)	rpm	Current(A) 400V	Eff. (%)	Power factor (Cosφ)	Cn (Nm)	Is/In	Cs/Cn	Cmin./Cn	Cmax/Cn	PD² Kgm²
T2C 132S1-2	5,5	2905	10,25	87	0,89	18,08	8,5	2,4	1,8	2,8	0,01251
T2C 132S2-2	7,5	2910	13,96	88,1	0,88	24,61	10	2,5	1,8	2,8	0,01613
T2C 160M1-2	11	2920	19,73	89,4	0,90	35,98	8,5	2,5	1,4	2,8	0,04561
T2C 160M2-2	15	2918	26,35	90,3	0,91	49,09	9	2,5	1,3	2,8	0,06206
T2C 160L-2	18,5	2922	31,93	90,9	0,92	60,46	9,5	2,5	1,4	2,8	0,07528
T2C 180M-2	22	2930	39,1	91,3	0,89	71,71	9	2,5	1,4	2,8	0,08110
T2C 200L1-2	30	2925	52,9	92	0,89	97,9	7	2,0	1,3	2,5	0,14253
T2C 200L2-2	37	2930	64,2	92,5	0,90	120,6	7,5	2,5	1,5	2,5	0,16466
T2C 225M-2	45	2930	79,4	92,9	0,88	146,7	7,5	2,5	1,3	2,4	0,24906
T2C 250M-2	55	2940	96,8	93,2	0,88	178,7	8,5	2,3	1,4	2,6	0,43328
T2C 280S-2	75	2940	125,4	93,8	0,92	243,6	9	2,5	1,8	2,6	0,79186
T2C 280M-2	90	2940	150,1	94,1	0,92	292,3	9,5	2,5	1,8	2,6	0,90716
T2C 315S-2	110	2940	187,1	94,3	0,90	357,3	6	2,0	1,4	2,3	1,50928
T2C 315M-2	132	2940	221,3	94,6	0,91	428,8	6	2,0	1,4	2,3	1,67962
T2C 315L1-2	160	2945	270,7	94,8	0,90	518,8	6	2,0	1,4	2,3	1,87385
T2C 315L2-2	200	2945	341,4	95	0,89	648,6	5,5	1,8	1,3	2,3	2,13283
T2C 355M2-2	250	2945	422,0	95	0,90	810,7	5,5	1,8	1,3	2,3	3,14272
T2C 355L2-2	315	2945	537,7	95	0,89	1021,5	5,5	1,8	1,3	2,3	3,85287

Electrical data (50Hz) Efficiency IE2 - 4 poles

Type	Power (kW)	rpm	Current(A) 400V	Eff. (%)	Power factor (Cosφ)	Cn (Nm)	Is/In	Cs/Cn	Cmin./Cn	Cmax/Cn	PD² Kgm²
T2C 132S-4	5,5	1430	11,04	87,7	0,82	36,73	8,8	2,2	1,8	3,0	0,02966
T2C 132M-4	7,5	1430	14,70	88,7	0,83	50,09	9	2,2	1,6	3,0	0,03981
T2C 160M-4	11	1440	19,43	89,8	0,91	72,95	7,1	2,5	1,6	2,5	0,08670
T2C 160L-4	15	1445	25,97	90,6	0,92	99,13	8,9	2,5	1,6	2,5	0,11272
T2C 180M-4	18,5	1445	34,05	91,2	0,86	122,3	8,6	2,5	1,6	2,8	0,14084
T2C 180L-4	22	1460	39,0	91,6	0,89	143,9	8,1	2,5	1,6	2,8	0,16541
T2C 200L-4	30	1460	56,5	92,3	0,83	196,2	8,5	2,5	2,1	3,0	0,27306
T2C 225S-4	37	1470	65,5	92,7	0,88	240,4	7,6	2,2	1,3	2,3	0,50439
T2C 225M-4	45	1480	79,3	93,1	0,88	290,4	7,7	2,2	1,3	2,3	0,59389
T2C 250M-4	55	1480	96,5	93,5	0,88	354,9	8,6	2,5	1,5	2,5	0,70950
T2C 280S-4	75	1480	126,6	94	0,91	484,0	9	2,5	2,0	2,5	1,59510
T2C 280M-4	90	1480	149,9	94,2	0,92	580,7	8,7	2,5	2,0	2,5	1,89187
T2C 315S-4	110	1480	186,7	94,5	0,90	709,8	7,4	2,0	1,3	2,8	3,09253
T2C 315M-4	132	1480	221,1	94,7	0,91	851,8	7	2,0	1,3	2,6	3,48345
T2C 315L1-4	160	1480	267,4	94,9	0,91	1032,4	6	2,0	1,3	2,6	3,98390
T2C 315L2-4	200	1480	337,3	95,1	0,90	1290,5	6	2,0	1,3	2,3	4,67201
T2C 355M2-4	250	1480	426,3	95,1	0,89	1613,2	5,5	1,8	1,3	2,3	7,63820
T2C 355L-4	315	1480	531,2	95,1	0,90	2032,6	5,5	1,8	1,3	2,3	9,08547

Electrical data (50Hz) Efficiency IE2 - 6 poles

Type	Power (kW)	rpm	Current(A) 400V	Eff. (%)	Power factor (Cosφ)	Cn (Nm)	Is/In	Cs/Cn	Cmin./Cn	Cmax/Cn	PD² Kgm²
T2C 132S-6	3	940	6,26	83,3	0,83	30,48	6	1,6	1,5	2,2	0,03039
T2C 132M1-6	4	945	8,12	84,6	0,84	40,42	6	2,0	1,6	2,5	0,03785
T2C 132M2-6	5,5	945	11,26	86	0,82	55,58	7	2,0	1,8	2,5	0,04890
T2C 160M-6	7,5	955	14,8	87,2	0,84	75,0	9	2,5	1,8	2,8	0,08726
T2C 160L-6	11	960	21,1	88,7	0,85	109,4	9	2,5	1,4	2,8	0,12069
T2C 180L-6	15	960	29,1	89,7	0,83	149,2	9	2,5	1,5	2,8	0,25695
T2C 200L1-6	18,5	965	34,8	90,4	0,85	183,1	9	2,0	1,4	2,8	0,36147
T2C 200L2-6	22	965	40,6	90,9	0,86	217,7	10	2,5	1,8	2,8	0,42742
T2C 225M-6	30	975	55,6	91,7	0,85	293,8	9	2,5	1,5	2,2	0,67058
T2C 250M-6	37	975	69,8	92,2	0,83	362,4	7	1,8	1,3	2,2	0,99243
T2C 280S-6	45	980	81,5	92,7	0,86	438,5	8,5	2,3	1,4	2,3	1,78548
T2C 280M1-6	55	980	99,2	93,1	0,86	536,0	9	2,5	1,7	2,8	2,20792
T2C 315S-6	75	980	129,8	93,7	0,89	730,9	7	2,0	1,3	2,3	3,25976
T2C 315M-6	90	980	153,6	94	0,90	877,0	7	2,0	1,3	2,3	3,90933
T2C 315L1-6	110	980	187,1	94,3	0,90	1071,9	7	2,0	1,3	2,3	4,54331
T2C 315L2-6	132	980	226,3	94,6	0,89	1286,3	6,5	2,0	1,3	2,3	5,53956
T2C 355M1-6	160	980	267,7	94,8	0,91	1559,2	6,5	2,0	1,3	2,3	8,97637
T2C 355M2-6	200	980	337,6	95	0,90	1949,0	6,5	2,0	1,3	2,3	11,00175
T2C 355L-6	250	980	426,8	95	0,89	2436,2	6,5	2,0	1,3	2,3	13,56011

SIMOTOP® GROUP

39. TC SERIES – Three-Phase Asynchronous single speed motors

Electrical data (50Hz) Efficiency IE3 - 2 poles

Type	Power (kW)	rpm	Current(A) 400V	Eff. (%)	Power factor (Cosφ)	Cn (Nm)	Is/In	Cs/Cn	Cmin./Cn	Cmax/Cn	PD² Kgm²
T3C 160M1-2	11	2920	19,34	91,2	0,90	35,98	9,5	2,5	1,4	3,0	0,05178
T3C 160M2-2	15	2918	25,89	91,9	0,91	49,09	10	2,5	1,4	3,0	0,06206
T3C 160L-2	18,5	2922	31,41	92,4	0,92	60,46	9,5	2,5	1,4	3,0	0,07669
T3C 180M-2	22	2930	38,5	92,7	0,89	71,71	9	2,5	1,4	3,0	0,09665
T3C 200L1-2	30	2925	52,1	93,3	0,89	97,9	8,5	2,5	1,5	2,5	0,17351
T3C 200L2-2	37	2930	63,3	93,7	0,90	120,6	8,5	2,5	1,5	2,5	0,20008
T3C 225M-2	45	2930	78,5	94	0,88	146,7	8,5	2,5	1,4	2,5	0,34366
T3C 250M-2	55	2940	95,7	94,3	0,88	178,7	10	2,5	1,4	2,6	0,44434
T3C 280S-2	75	2940	124,3	94,7	0,92	243,6	10	2,5	1,8	2,6	0,82911
T3C 280M-2	90	2940	148,6	95	0,92	292,3	10	2,5	1,8	2,6	0,98168
T3C 315S-2	110	2940	185,3	95,2	0,90	357,3	7	2,0	1,4	2,3	1,70352
T3C 315M-2	132	2940	219,5	95,4	0,91	428,8	7	2,0	1,4	2,3	1,93860
T3C 315L1-2	160	2945	267,8	95,8	0,90	518,8	7	2,0	1,4	2,3	2,19758
T3C 315L2-2	200	2945	338,6	95,8	0,89	648,6	7	2,0	1,4	2,3	2,55368
T3C 355M2-2	250	2945	418,5	95,8	0,90	810,7	6,5	2,0	1,5	2,3	3,14272
T3C 355L2-2	315	2945	533,3	95,8	0,89	1021,5	6,5	2,0	1,5	2,3	3,85287

Electrical data (50Hz) Efficiency IE3 - 4 poles

Type	Power (kW)	rpm	Current(A) 400V	Eff. (%)	Power factor (Cosφ)	Cn (Nm)	Is/In	Cs/Cn	Cmin./Cn	Cmax/Cn	PD² Kgm²
T3C 160M-4	11	1440	19,09	91,4	0,91	72,95	10	2,5	1,3	3,0	0,10355
T3C 160L-4	15	1445	25,55	92,1	0,92	99,1	8,5	2,5	1,3	2,8	0,13750
T3C 180M-4	18,5	1445	33,5	92,6	0,86	122,3	9	2,5	1,8	3,0	0,15530
T3C 180L-4	22	1460	38,4	93	0,89	143,9	10	2,5	1,8	3,0	0,19433
T3C 200L-4	30	1460	55,7	93,6	0,83	196,2	9	2,5	1,8	2,8	0,29441
T3C 225S-4	37	1470	64,6	93,9	0,88	240,4	9,2	2,5	1,4	2,5	0,57838
T3C 225M-4	45	1480	78,4	94,2	0,88	290,4	9	2,5	1,5	2,5	0,65309
T3C 250M-4	55	1480	95,4	94,6	0,88	354,9	8,5	2,5	1,8	2,5	0,76504
T3C 280S-4	75	1480	125,2	95	0,91	484,0	10	2,5	1,8	2,8	1,99603
T3C 280M-4	90	1480	148,3	95,2	0,92	580,7	10	2,5	1,8	2,8	2,18345
T3C 315S-4	110	1480	184,9	95,4	0,90	709,8	9	2,2	1,5	2,6	3,71808
T3C 315M-4	132	1480	219,0	95,6	0,91	851,8	9	2,2	1,5	2,6	4,29667
T3C 315L1-4	160	1480	264,9	95,8	0,91	1032,4	9	2,2	1,5	2,6	5,10990
T3C 315L2-4	200	1480	334,1	96	0,90	1290,5	9	2,2	1,5	2,6	6,17334
T3C 355M2-4	250	1480	422,3	96	0,89	1613,2	8	2,0	1,3	2,3	7,63820
T3C 355L2-4	315	1480	526,2	96	0,90	2032,6	8	2,0	1,3	2,3	9,34080

Electrical data (50Hz) Efficiency IE3 - 6 poles

Type	Power (kW)	rpm	Current(A) 400V	Eff. (%)	Power factor (Cosφ)	Cn (Nm)	Is/In	Cs/Cn	Cmin./Cn	Cmax/Cn	PD² Kgm²
T3C 160M-6	7,5	955	14,5	89,1	0,84	75,0	7,5	2,3	1,4	2,8	0,08726
T3C 160L-6	11	960	20,7	90,3	0,85	109,4	8,5	2,5	1,4	2,8	0,13544
T3C 180L-6	15	960	28,6	91,2	0,83	149,2	8	2,5	1,4	2,8	0,27973
T3C 200L1-6	18,5	965	34,3	91,7	0,85	183,1	9,5	2,5	1,4	2,8	0,38345
T3C 200L2-6	22	965	40,0	92,2	0,86	217,7	10	2,5	1,5	2,8	0,44941
T3C 225M-6	30	975	54,8	92,9	0,85	293,8	7	1,8	1,5	2,2	0,67058
T3C 250M-6	37	975	69,0	93,3	0,83	362,4	7	1,8	1,3	2,0	0,99243
T3C 280S-6	45	980	80,6	93,7	0,86	438,5	10	2,5	1,8	2,8	2,20274
T3C 280M1-6	55	980	98,1	94,1	0,86	536,0	10	2,5	1,8	2,8	2,57302
T3C 315S-6	75	980	128,6	94,6	0,89	730,9	7,5	2,0	1,3	2,3	3,80317
T3C 315M-6	90	980	152,1	94,9	0,90	877,0	7,5	2,0	1,3	2,3	4,45274
T3C 315L1-6	110	980	185,5	95,1	0,90	1071,9	7,5	2,0	1,3	2,3	5,53956
T3C 315L2-6	132	980	224,4	95,4	0,89	1286,3	7,5	2,0	1,3	2,3	6,62638
T3C 355M1-6	160	980	265,5	95,6	0,91	1559,2	7,5	2,0	1,3	2,3	8,97637
T3C 355M2-6	200	980	334,8	95,8	0,90	1949,0	7,5	2,0	1,3	2,3	11,00175
T3C 355L-6	250	980	423,2	95,8	0,89	2436,2	7,5	2,0	1,3	2,3	13,56011
T3C 355M2-6	200	980	367,5	95,8	0,82	1949,0	7,5	2,0	1,3	2,3	11,00175
T3C 355L-6	250	980	459,3	95,8	0,82	2436,2	7,5	2,0	1,3	2,3	13,56011

SIMOTOP® GROUP

39. TC SERIES – Three-Phase Asynchronous single speed motors

Electrical data (50Hz) Efficiency IE4 - 2 poles

Type	Power (kW)	rpm	400V Current (A)	Efficiency (%)			Power factor (Cosφ)	Tn (Nm)	Ist/In (Times)	Tst/Tn (Times)	Tmin/Tn (Times)	Tmax/Tn (Times)	PD² Kg/m²
				100%	75%	50%							
T4C 160M1-2	11	2920	19,35	92,6	94,9	94,1	0,89	35,98	9,5	2,5	1,4	3	0,05178
T4C 160M2-2	15	2918	25,93	93.3	94,1	93,9	0,90	49,09	10	2,5	1,4	3	0,06206
T4C 160L-2	18,5	2922	31,45	93.7	94,5	94,3	0,91	60,46	9,5	2,5	1,4	3	0,07669
T4C 180M-2	22	2930	38,56	94,0	95,1	94,6	0,88	71,71	9	2,5	1,4	3	0,09665
T4C 200L1-2	30	2925	52,30	94,5	94,7	94,1	0,88	97,9	8,5	2,5	1,5	2,5	0,17351
T4C 200L2-2	37	2930	63,57	94,8	95,2	95,0	0,89	120,6	8,5	2,5	1,5	2,5	0,20008
T4C 225M-2	45	2930	78,85	95,0	95,4	94,9	0,87	146,7	8,5	2,5	1,4	2,5	0,34366
T4C 250M-2	55	2940	96,06	95,3	95,3	93,9	0,87	178,7	10	2,5	1,4	2,6	0,44434
T4C 280S-2	75	2940	124,84	95,6	95,6	94,4	0,91	243,6	10	2,5	1,8	2,6	0,82911
T4C 280M-2	90	2940	149,50	95,8	95,8	94,9	0,91	292,3	10	2,5	1,8	2,6	0,98168
T4C 315S-2	110	2940	186,44	96,0	96,1	95,2	0,89	357,3	7	2	1,4	2,3	1,70352
T4C 315M-2	132	2940	220,78	96,2	96,1	95,3	0,90	428,8	7	2	1,4	2,3	1,9386
T4C 315L1-2	160	2945	270,05	96,3	96,4	95,1	0,89	518,8	7	2	1,4	2,3	2,19758
T4C 315L2-2	200	2945	341,05	96,5	96,5	95,2	0,88	648,6	7	2	1,4	2,3	2,55368
T4C 355M2-2	250	2945	420,21	96,5	97,0	95,6	0,89	810,7	6,5	2	1,5	2,3	3,14272
T4C 355L2-2	315	2945	535,48	96,6	97,0	95,6	0,88	1021,5	6,5	2	1,5	2,3	3,85287

Electrical data (50Hz) Efficiency IE4 - 4 poles

Type	Power (kW)	rpm	400V Current (A)	Efficiency (%)			Power factor (Cosφ)	Tn (Nm)	Ist/In (Times)	Tst/Tn (Times)	Tmin/Tn (Times)	Tmax/Tn (Times)	PD² Kg/m²
				100%	75%	50%							
T4C 160M-4	11	1440	18,93	93,3	94,1	93,6	0,90	72,95	10	2,5	1,3	3	0,10355
T4C 160L-4	15	1445	25,37	93,9	94,7	94,0	0,91	99,1	8,5	2,5	1,3	2,8	0,1375
T4C 180M-4	18,5	1445	33,39	94,2	95,2	94,6	0,85	122,3	9	2,5	1,8	3	0,1553
T4C 180L-4	22	1460	38,23	94,5	95,2	94,4	0,88	143,9	10	2,5	1,8	3	0,19433
T4C 200L-4	30	1460	55,71	94,9	95,0	94,5	0,82	196,2	9	2,5	1,8	2,8	0,29441
T4C 225S-4	37	1470	64,56	95,2	96,5	95,6	0,87	240,4	9,2	2,5	1,4	2,5	0,57838
T4C 225M-4	45	1480	78,35	95,4	96,4	95,7	0,87	290,4	9	2,5	1,5	2,5	0,65309
T4C 250M-4	55	1480	95,46	95,7	96,3	95,6	0,87	354,9	8,5	2,5	1,8	2,5	0,76504
T4C 280S-4	75	1480	125,44	96,0	96,1	95,8	0,90	484	10	2,5	1,8	2,8	1,99603
T4C 280M-4	90	1480	148,72	96,1	96,0	95,9	0,91	580,7	10	2,5	1,8	2,8	2,18345
T4C 315S-4	110	1480	185,47	96,3	96,6	95,5	0,89	709,8	9	2,2	1,5	2,6	3,71808
T4C 315M-4	132	1480	219,86	96,4	96,6	95,8	0,90	851,8	9	2,2	1,5	2,6	4,29667
T4C 315L1-4	160	1480	265,95	96,6	96,8	95,9	0,90	1032,4	9	2,2	1,5	2,6	5,1099
T4C 315L2-4	200	1480	335,82	96,7	96,9	96,0	0,89	1290,5	9	2,2	1,5	2,6	6,17334
T4C 355M2-4	250	1480	424,55	96,7	97,0	96,1	0,88	1613,2	8	2	1,3	2,3	7,6382
T4C 355L2-4	315	1480	528,92	96,7	97,0	95,2	0,89	2032,6	8	2	1,3	2,3	9,3408

Electrical data (50Hz) Efficiency IE4 - 6 poles

Type	Power (kW)	rpm	400V Current (A)	Efficiency (%)			Power factor (Cosφ)	Tn (Nm)	Ist/In (Times)	Tst/Tn (Times)	Tmin/Tn (Times)	Tmax/Tn (Times)	PD² Kg/m²
				100%	75%	50%							
T4C 160M-6	7,5	955	14,30	91,3	92,5	90,2	0,83	75	7,5	2,3	1,4	2,8	0,08726
T4C 160L-6	11	960	20,50	92,3	93,2	90,5	0,84	109,4	8,5	2,5	1,4	2,8	0,13544
T4C 180L-6	15	960	28,45	92,9	93,7	92,0	0,82	149,2	8	2,5	1,4	2,8	0,27973
T4C 200L1-6	18,5	965	34,08	93,4	94,0	92,3	0,84	183,1	9,5	2,5	1,4	2,8	0,38345
T4C 200L2-6	22	965	39,92	93,7	94,5	92,8	0,85	217,7	10	2,5	1,5	2,8	0,44941
T4C 225M-6	30	975	54,79	94,2	95,1	92,2	0,84	293,8	7	1,8	1,5	2,2	0,67058
T4C 250M-6	37	975	69,00	94,5	95,2	93,0	0,82	362,4	7	1,8	1,3	2	0,99243
T4C 280S-6	45	980	80,70	94,8	95,7	93,8	0,85	438,5	10	2,5	1,8	2,8	2,20274
T4C 280M1-6	55	980	98,32	95,1	96,0	94,4	0,85	536	10	2,5	1,8	2,8	2,57302
T4C 315S-6	75	980	129,10	95,4	95,6	94,0	0,88	730,9	7,5	2	1,3	2,3	3,80317
T4C 315M-6	90	980	152,86	95,6	95,7	94,1	0,89	877	7,5	2	1,3	2,3	4,45274
T4C 315L1-6	110	980	186,44	95,8	96,1	94,7	0,89	1071,9	7,5	2	1,3	2,3	5,53956
T4C 315L2-6	132	980	225,79	96,0	96,1	94,6	0,88	1286,3	7,5	2	1,3	2,3	6,62638
T4C 355M1-6	160	980	267,05	96,2	96,4	94,9	0,90	1559,2	7,5	2	1,3	2,3	8,97637
T4C 355M2-6	200	980	337,22	96,3	96,3	94,8	0,89	1949	7,5	2	1,3	2,3	11,00175
T4C 355L-6	250	980	425,43	96,5	96,7	95,0	0,88	2436,2	7,5	2	1,3	2,3	13,56011

SIMOTOP® GROUP

40. TC SERIES - Weight TC IE1

Type	Kw	Weight (kg) (*) B3
132S1-2	5,5	56,1
132S2-2	7,5	60,8
160M1-2	11	104,1
160M2-2	15	115,1
160L-2	18,5	130,5
180M-2	22	161,7
200L1-2	30	213,7
200L2-2	37	225,4
225M1-2	45	296,9
250M1-2	55	387,7
280S-2	75	519,4
280M-2	90	560,6
315S-2	110	901,6
315M-2	132	938,3
315L1-2	160	1043,7
315L2-2	200	1046,2
355M2-2	250	1587,6
355L2-2	315	1729,7

Type	Kw	Weight (kg) (*) B3
132S-4	5,5	59,8
132M-4	7,5	78,1
160M-4	11	106,2
160L-4	15	128,0
180M-4	18,5	149,9
180L-4	22	176,4
200L-4	30	212,2
225S-4	37	299,1
225M1-4	45	330,1
250M1-4	55	402,4
280S-4	75	529,2
280M-4	90	607,6
315S-4	110	824,4
315M-4	132	1332,8
315L1-4	160	1019,6
315L2-4	200	1450,4
355M2-4	250	1512,3
355L2-4	315	1684,8

(*) Weights are indicative may vary by changing the materials used,
Simotop Group Spa reserves the right to modify this data at any time and without notice.

Type	Kw	Weight (kg) (*) B3
132S-6	3	58,6
132M1-6	4	61,8
132M2-6	5,5	63,7
160M-6	7,5	108,2
160L-6	11	126,6
180L-6	15	169,9
200L1-6	18,5	218,5
200L2-6	22	232,5
225M-6	30	303,0
250M-6	37	381,4
280S-6	45	499,7
280M-6	55	570,4
315S-6	75	776,4
315M-6	90	880,6
315L1-6	110	1078,0
315L2-6	132	1151,5
355M1-6	160	1506,3
355M2-6	200	1610,8
355L2-6	250	1842,4

Type	Kw	Weight (kg) (*) B3
132S-8	2,2	58,0
132M-8	3	70,0
160M1-8	4	108,0
160M2-8	5,5	124,0
160L-8	7,5	136,0
180L-8	11	174,0
200L-8	15	222,8
225S-8	18,5	285,0
225M-8	22	316,4
250M-8	30	396,6
280S-8	37	523,0
280M-8	45	575,0
315S-8	55	842,0
315M-8	75	998,8
315L1-8	90	1096,8
315L2-8	110	1191,2
355M1-8	132	1496,8
355M2-8	160	1634,0
355L2-8	200	1776,0

(*) Weights are indicative may vary by changing the materials used,
Simotop Group Spa reserves the right to modify this data at any time and without notice.

SIMOTOP® GROUP

40. TC SERIES - Weight TC IE2

Type	Kw	Weight (kg) (*) B3
132S1-2	5,5	58,2
132S2-2	7,5	62,7
160M1-2	11	106,8
160M2-2	15	117,6
160L-2	18,5	133,1
180M-2	22	163,2
200L1-2	30	216,4
200L2-2	37	226,3
225M-2	45	298,3
250M-2	55	389,6
280S-2	75	522,3
280M-2	90	564,8
315S-2	110	908,5
315M-2	132	985,9
315L1-2	160	1043,9
315L2-2	200	1046,8
355M2-2	250	1597,4
355L2-2	315	1731,6

Type	Kw	Weight (kg) (*) B3
132S-4	5,5	61,6
132M-4	7,5	79,4
160M-4	11	108,2
160L-4	15	130,0
180M-4	18,5	151,5
180L-4	22	176,8
200L-4	30	217,2
225S-4	37	300,7
225M-4	45	332,3
250M-4	55	404,3
280S-4	75	538,4
280M-4	90	621,0
315S-4	110	845,3
315M-4	132	1338,7
315L1-4	160	1083,9
315L2-4	200	1470,6
355M2-4	250	1560,2
355L-4	315	1702,3

(*) Weights are indicative may vary by changing the materials used,
Simotop Group Spa reserves the right to modify this data at any time and without notice.

Type	Kw	Weight (kg) (*) B3
132S-6	3	61,7
132M1-6	4	63,7
132M2-6	5,5	64,7
160M-6	7,5	109,4
160L-6	11	129,9
180L-6	15	171,5
200L1-6	18,5	221,2
200L2-6	22	235,1
225M-6	30	308,3
250M-6	37	383,6
280S-6	45	503,7
280M-6	55	572,3
315S-6	75	790,9
315M-6	90	894,2
315L1-6	110	1085,0
315L2-6	132	1058,4
355M1-6	160	1512,9
355M3-6	200	1654,2
355L2-6	250	1883,0

(*) Weights are indicative may vary by changing the materials used,
Simotop Group Spa reserves the right to modify this data at any time and without notice.

SIMOTOP® GROUP

40. TC SERIES - Weight TC IE3

Type	Kw	Weight (kg) (*) B3
132S1-2	5,5	60,7
132S2-2	7,5	63,4
160M1-2	11	107,9
160M2-2	15	118,1
160L-2	18,5	133,8
180M-2	22	165,4
200L1-2	30	219,1
200L2-2	37	228,1
225M-2	45	300,7
250M-2	55	390,2
280S-2	75	525,4
280M-2	90	567,2
315S-2	110	913,4
315M-2	132	991,7
315L1-2	160	1050,5
315L2-2	200	1048,7
355M2-2	250	1602,3
355L2-2	315	1735,7

Type	Kw	Weight (kg) (*) B3
132S-4	5,5	62,3
132M-4	7,5	80,4
160M-4	11	110,1
160L-4	15	131,0
180M-4	18,5	152,8
180L-4	22	177,8
200L-4	30	219,3
225S-4	37	302,6
225M-4	45	336,1
250M-4	55	406,5
280S-4	75	539,8
280M-4	90	623,2
315S-4	110	864,7
315M-4	132	960,3
315L1-4	160	1108,0
315L2-4	200	1210,8
355M2-4	250	1573,5
355L-4	315	1722,6

(*) Weights are indicative may vary by changing the materials used,
Simotop Group Spa reserves the right to modify this data at any time and without notice.

Type	Kw	Weight (kg) (*) B3
132S-6	3	62,6
132M1-6	4	65,4
132M2-6	5,5	65,1
160M-6	7,5	110,0
160L-6	11	131,8
180L-6	15	172,8
200L1-6	18,5	222,5
200L2-6	22	237,2
225M-6	30	310,4
250M-6	37	386,2
280S-6	45	506,2
280M-6	55	532,5
315S-6	75	806,3
315M-6	90	913,8
315L1-6	110	1100,4
315L2-6	132	1107,8
355M1-6	160	1516,5
355M3-6	200	1656,2
355L2-6	250	1890,0

(*) Weights are indicative may vary by changing the materials used,
Simotop Group Spa reserves the right to modify this data at any time and without notice.

SIMOTOP® GROUP

40. TC SERIES - Weight TC IE4

Type	Kw	Weight (kg) (*) B3
160M1-2	11	110,0
160M2-2	15	121,0
160L-2	18,5	136,0
180M-2	22	169,0
200L1-2	30	223,0
200L2-2	37	233,0
225M-2	45	309,0
250M-2	55	398,5
280S-2	75	532,8
280M-2	90	574,0
315S-2	110	926,0
315M-2	132	1010,0
315L1-2	160	1087,0
315L2-2	200	1103,0
355M2-2	250	1632,0
355L2-2	315	1754,0

Type	Kw	Weight (kg) (*) B3
160M-4	11	113,0
160L-4	15	134,0
180M-4	18,5	155,5
180L-4	22	182,0
200L-4	30	223,0
225S-4	37	308,0
225M-4	45	342,0
250M-4	55	410,0
280S-4	75	543,0
280M-4	90	631,0
315S-4	110	881,0
315M-4	132	1062,0
315L1-4	160	1145,0
315L2-4	200	1290,0
355M2-4	250	1600,0
355L-4	315	1754,0

(*) Weights are indicative may vary by changing the materials used,
Simotop Group Spa reserves the right to modify this data at any time and without notice.

Type	Kw	Weight (kg) (*) B3
160M-6	7,5	112,00
160L-6	11	134,00
180L-6	15	175,70
200L1-6	18,5	228,00
200L2-6	22	241,00
225M-6	30	319,00
250M-6	37	393,00
280S-6	45	521,00
280M-6	55	546,00
315S-6	75	821,00
315M-6	90	935,00
315L1-6	110	1115,00
315L2-6	132	1132,00
355M1-6	160	1537,00
355M3-6	200	1678,00
355L2-6	250	1920,00

(*) Weights are indicative may vary by changing the materials used,
Simotop Group Spa reserves the right to modify this data at any time and without notice.

SIMOTOP® GROUP

41. TC SERIES - Overall and Installation dimensions

Measures in mm

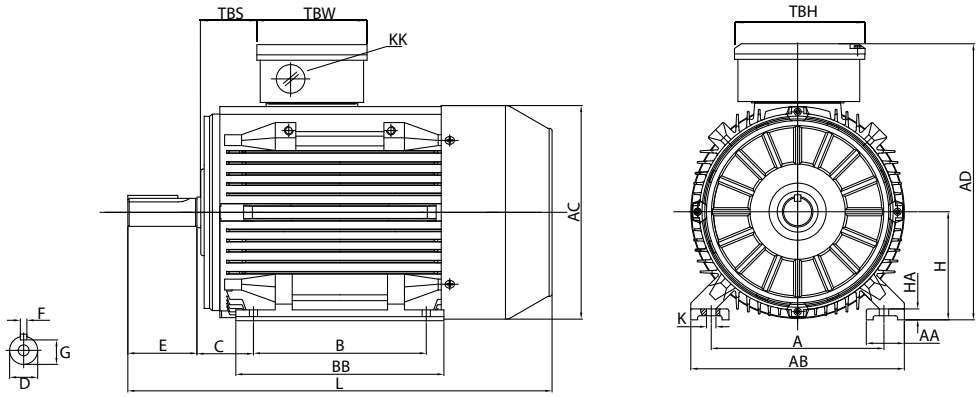

IM B3

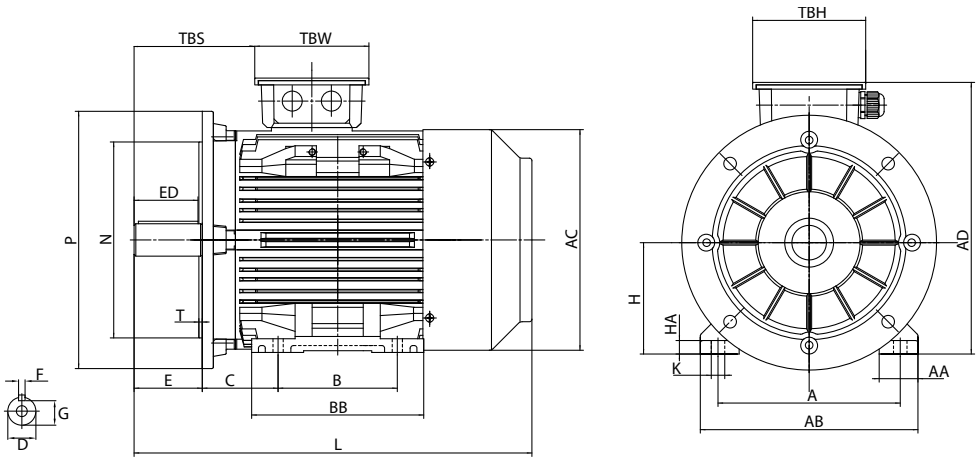

IM B3/B5

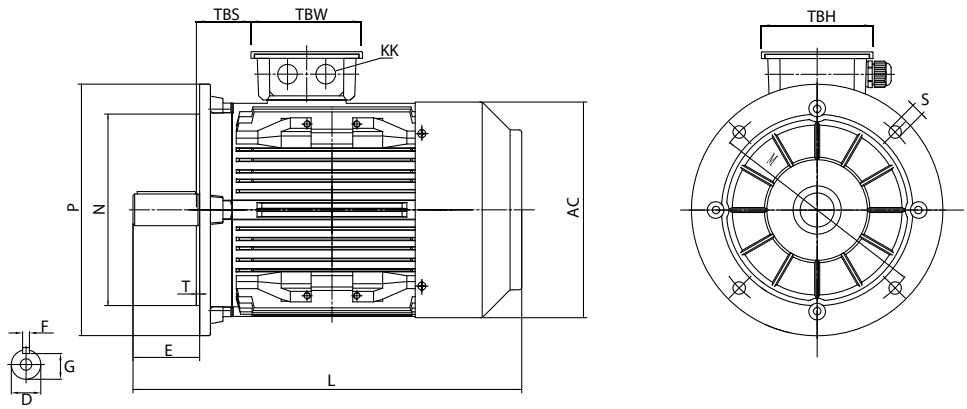

IM B5

Frame size		B3				Shaft					General							
		H	A	B	C	D	E	F	G	K	AB	AD	HD	AC	L	TBS	TBW	TBH
132S/M		132	216	140/178	89	Ø38	80	10	33	Ø12	255	332	200	259	467/505	29	118	118
160M/L		160	254	210/254	108	Ø42	110	12	37	Ø15	314	402	242	313	605/650	91	162	187
180M/L		180	279	241/279	121	Ø48	110	14	42.5	Ø15	348	439	259	360	687/725	160/180	162	187
200L		200	318	305	133	Ø55	110	16	49	Ø19	388	497	297	399	768	192	186	233
225S	4,8	225	356	286	149	Ø60	140	18	53	Ø19	436	553	328	465	814	190	186	233
225M	2	225	356	311	149	Ø55	110	16	49	Ø19	436	553	328	465	809	202	186	233
	4,6,8	225	356	311	149	Ø60	140	18	53	Ø19	436	553	328	465	839	202	186	233
250M	2	250	406	349	168	Ø60	140	18	53	Ø24	484	616	366	506	918	233	218	260
	4,6,8	250	406	349	168	Ø65	140	18	58	Ø24	484	616	366	506	918	233	218	260
280S/M	2	280	457	368/419	190	Ø65	140	18	58	Ø24	557	668	388	559	984/1035	265	218	260
	4,6,8	280	457	368/419	190	Ø75	140	20	67.5	Ø24	557	668	388	559	984/1035	265	218	260
315S	2	315	508	406	216	Ø65	140	18	58	Ø28	630	845	530	680	1205	130	280	320
	4,6,8	315	508	406	216	Ø80	170	22	71	Ø28	630	845	530	680	1235	130	280	320
315M/L	2	315	508	457/508	216	Ø65	140	18	58	Ø28	630	845	530	680	1355	130	280	320
	4,6,8	315	508	457/508	216	Ø80	170	22	71	Ø28	630	845	530	680	1385	130	280	320
355M/L	2	355	610	560/630	254	Ø75	140	20	67.5	Ø28	740	1010	655	820	1500	HO	330	380
	4,6,8	355	610	560/630	254	Ø100	210	28	90	Ø28	740	1010	655	820	1570	140	330	380

Frame size		B5						B14					
		N	M	P	S	T	R	N	M	P	S	T	R
132S/M		230	265	300	4-Ø15	4	0	130	165	198	M10	3.5	0
160M/L		250	300	350	4-Ø19	5	0						
180M/L		250	300	350	4-Ø19	5	0						
200L		300	350	400	4-Ø19	5	0						
225S	4,8	350	400	450	8-Ø19	5	0						
225M	2	350	400	450	8-Ø19	5	0						
	4,6,8	350	400	450	8-Ø19	5	0						
250M	2	450	500	550	8-Ø19	5	0						
	4,6,8	450	500	550	8-Ø19	5	0						
280S/M	2	450	500	550	8-Ø19	5	0						
	4,6,8	450	500	550	8-Ø19	5	0						
315S/M/L	2	550	600	660	4-Ø24	6	0						
	4,6,8	550	600	660	4-Ø24	6	0						
355M/L	2	680	740	800	4-Ø24	6	0						
	4,6,8	680	740	800	4-Ø24	6	0						

42. TC SERIES - Exploded view drawings and Spare Parts list

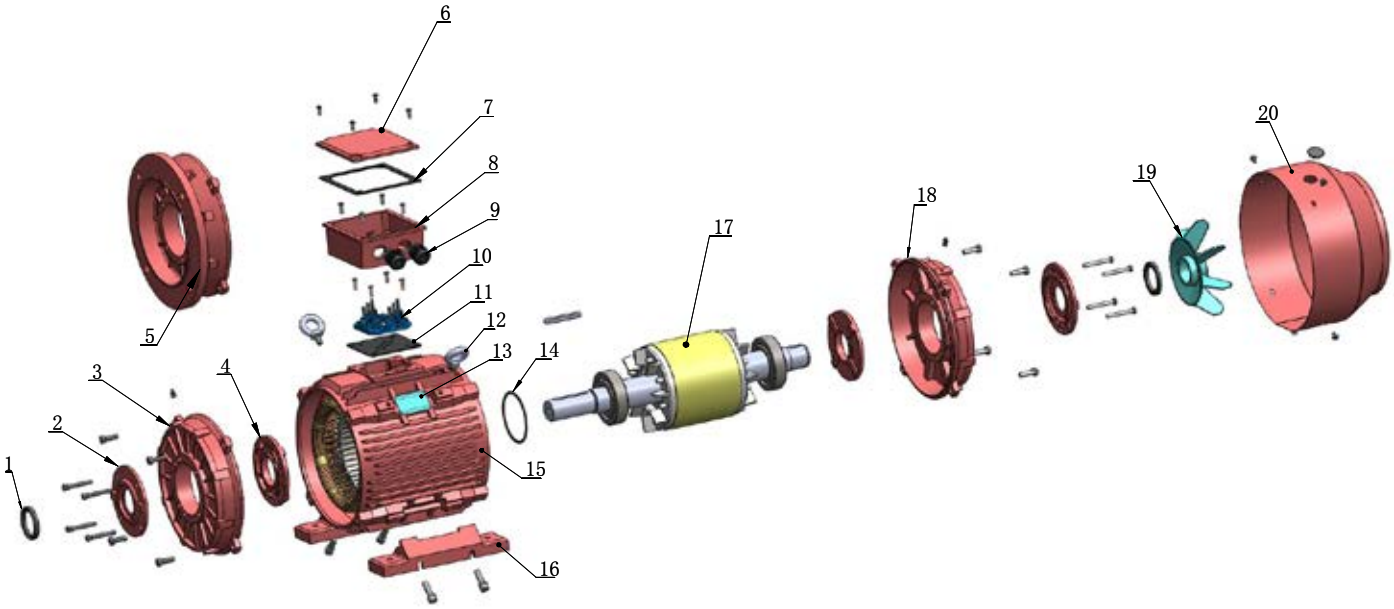

1. Oil seal
2. DE bearing cover
3. DE endshield
4. NDE bearing cover
5. B5 Flange
6. Terminal box cover
7. Terminal bottomgasket
8. Terminal box
9. Cable glad
10. Terminal box board
11. Terminal box upper gasket
12. Eyebolt
13. Nameplate
14. Preload washer
15. Frame
16. Foot
17. Rotor
18. NDE endshield
19. Fan
20. Fan cover

POWER

43. CERTIFICATES

Certificate of Compliance
E -2017

ISO 9001(2016)

Techtop REACH compliance

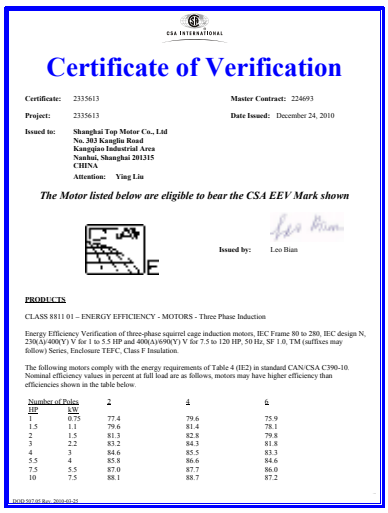

Compliance IE2
N° 2335613

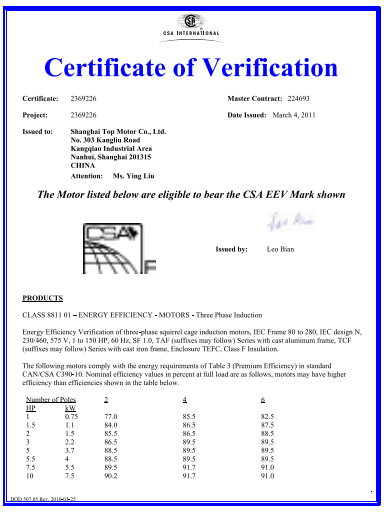

Compliance IE3
N° 2369226

CSA us compliance
N° 2073480

Certificate of Compliance CE

China Energy Label IE3

Germanischer Lloyd

Germanischer Lloyd

Certificate ISO9001TOP 2018
N° 11413E23348R0M

Certificate of Compliance
EX26635-20141231

Certificate of Compliance
CE ATEX3GD-IT-2017

Ambiental Certificate
ISO14001 TOP 2018

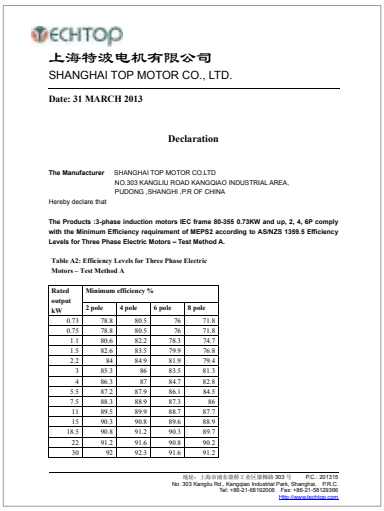

Rated output kW	Minimum efficiency %			
	2 pole	4 pole	6 pole	8 pole
0.73	78.8	80.5	76	71.8
0.75	78.8	80.5	76	71.8
1.1	80.6	82.2	78.3	74.7
1.5	82.6	83.5	79.9	76.8
2.2	84	84.9	81.9	79.4
3	85.3	86	83.5	81.3
4	86.3	87	84.7	82.8
5.5	87.2	87.9	86.1	84.3
7.5	88.1	88.9	87.1	86
11	89.5	89.9	88.7	87.7
15	90.3	90.8	89.6	88.9
18.5	90.8	91.2	90.3	89.7
22	91.2	91.6	90.8	90.2
30	92	92.3	91.6	91.2

Certificate of Compliance
MEPS2

ЕАЭС№RUД-CN АЛ16 В
68988

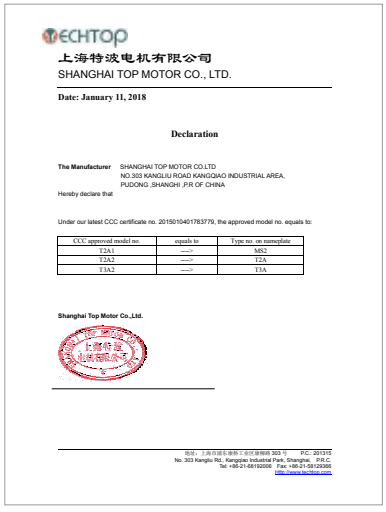

CCC approved model no.	equals to	Type no. on nameplate
T2A1	---->	M52
T2A2	---->	T2A
T3A2	---->	T3A

Certificate CCC

Certificate ATEX 3GD 2018

Also: Certificate CSAus/UL Nema • Epact/ Nema Premium N° 224693 •Certificate CCC

44. GENERAL CONDITIONS OF SALE

ACCEPTANCE
The purchase order must contain all the necessary information for the correct supply of the good listed in it. We reserve the right to modify the offer price or proceed to charge the amount corresponding to the increase in costs incurred after the confirmation.
The purchase order is always subject to our acceptance through our written confirmation.

PACKAGING
Unless differently specified in our offer or in our order confirmation, we consider the packaging's cost in accordance with our standard features.

LIMITS OF THE CONTRACT
Our offer and our order confirmation refer only to the goods, accessories and services specified in them. Technical information, descriptive specifications, delivery terms, drawings and details about weights and dimensions sent with the offer are only indicative.
The description and illustrations contained in our catalogues, price lists or other advertising material give only a general representation of the products. Following the transmission of the order and order confirmation, we can supply the relative technical documentation.

CHECK AND TESTS
Our products are carefully checked and submitted for testing by the production company. Special tests other than those normally carried out by us in the production company, or carried out in the presence of the customer or a third party appointed by it, will be made if requested during the order and accepted by us in order confirmation at the expenses of the customer.

DELIVERY
The delivery time starts from our receipt of a written order with all the information. The order is considered approved by the client 3 days later after the reception of the order confirmation. The delivery term can be extended if the delay is due to the missing of instructions relative to the supply. If the goods were not supplied in the established delivery terms, we will not in any way be responsible for the loss or damage or any consequence of delay.

PRICES
The prices are those indicated in our order confirmation. Prices are to be considered ex-works. In case of modifications or work interruptions due to instruction or missing instructions by the client, the prices of the contract will be modified in accordance. It will be our exclusive to refuse or suspend deliveries in case of default for the customer for any amount in its debt. In case of non-payment by the customer, at the contractually agreed deadlines, even only a part of the total consideration for the supplies.

PAYMENTS
Except for different written implementation, the entire payment must be paid within the terms indicated in the order confirmation; the goods remain the property of the seller until full payment at the relative invoice is made.

STORAGE
In case we do not receive sufficient instruction for the delivery, within 14 days, notice goods ready, the client must take the delivered goods or arrange for their storage. Otherwise, we have the right to arrange for you the good's storage in our warehouse or at an appropriate location. Storage, insurance and delay costs will be charged to the customer.

RETURNS
Claims for goods delivered for an incomplete delivery must be communicated in writing within 7 days of delivery. Returns will not be accepted unless pre-authorized by our company in writing.

DEFECTS AFTER DELIVERY AND PRODUCT WARRANTY

We will take care of the repair of the good or its replacement in case of defects (design defects and wrong processing) that occur within a period of 12 months. The complaint must be in writing within 8 days of its discovery. The repairs will be carried out in the place that we consider suitable and carried out by our assistance service. Defects due to improper maintenance or installation are excluded from our responsibility, we advise to follow all the instructions provided in the "maintenance manual" attached to each motor. The motors will be out of warranty if repairs or interventions are carried out by unauthorized persons. Any claims for incomplete or incorrect deliveries or for recognizable defects must be communicated to our company in writing within 8 days of their discovery. In case of interventions under warranty the costs of transport, packaging, assembly, reassembly will be charged to the customer.

RESPONSIBILITY

Our company will be exempt from any liability for: contractual losses, plant downtime, loss of profit or any other loss of profit in relation to warranty / returned goods. The customer declares to be responsible for any damage to himself and / or third parties for the any loss that occurred after delivery.

RESERVATION OF PROPERTY

The goods remain the property of the seller until full payment at the relative invoice is made, also after the delivery of the goods to the customer.
In case that the customer does not make full/partial payment of the supplies, our company may return the products delivered (at the customer's expense), by written request.

PERSONAL DATA PROCESSING

In accordance to the normative D.Lgs: 196/2003 the customer authorizes our company to use and process their personal data. The customer is also informs, article 7 nomative 196/2003, that he is the owner of the rights mentioned in the following article for their exercise. The customer authorizes our company to communicate their personal data for statistical purposes.

APPLICABLE LAW AND JURISDICTION

The contract is governed by Italian law and must be interpreted according to its criteria. For any conflict, the court of Bologna will have exclusive jurisdiction.

45. NETWORK

EUROPE

ITALY

Simotop Group Spa
Via Cà Bianca 320
40024 Castel San Pietro Terme (BO)
web: www.simotopgroup.com

GERMANY

Techtop Adda Motor Gmbh
Kronberger Straße 16
63110 Rodgau
web: www.techtop.com - www.simotopgroup.com

SPAIN

Dimotor sa
Carrer Corrals Nous 61
P.I. Can Roqueta
08202 Sabadell
Barcellona
web: www.dimotor.com

UNITED KINGDOM

TEC Electric motors Ltd
Unit 1 Building 341
Rustock Trading Est
Droitwich WR9 0NR
web: www.tecmotors.co.uk

NETHERLANDS

Simotop N.V.
Broekstraat 32
6828 PZ Arnhem
web: www.simotopgroup.com

AMERICA

USA

Techtop Industries, Inc.
2815 Colonnades Court
Peachtree Corners, GA 30071
web: www.techtopind.com

CANADA

Techtop Canada Inc.
2-2795 Brighton Road
Oakville, ON L6H 6J4
Toronto,ON
10060 Boulevard Louis-H. Lafontaine
Anjou, QC H1J 2T3
Montreal,QC
web: www.techtopcanada.com

ASIA

SINGAPORE

Elektrim Techtop Motors Pte Ltd
80 Joo Koon Circle
Singapore 629100
web: www.elektrim-techtop.com

VIETNAM

Elektrim Motors & Machinery (Vietnam) Pte Ltd
68 Bac Hai Street, Ward 6, Tan Binh District
Ho Chi Minh, Vietnam
web: www.elektrim-techtop.com

MYANMAR

Amos Myanmar Services Co. Ltd
No. 150/152 First Floor, 47 Street (Upper)
Botahtaung Township
Yangon, Myanmar
web: www.elektrim-techtop.com

MALAYSIA

Elektrim Techtop Motors Sdn Bhd
No. 12 & 14, Jalan Apollo U5/188, Seksyen U5
Bandar Pinggiran Subang, 40150 Shah Alam
Selangor Darul Ehsan, Malaysia
web: www.elektrim-techtop.com

Millivest Sdn Bhd (East Malaysia)
Block A Lot 4 Ground Floor, Jalan Elopura
Taman Grandview Ppm 111
Sabah 90000 Sandakan, Malaysia
web: www.elektrim-techtop.com

INDONESIA

PT Interjaya Surya Megah
Jalan Rungkut Industri III/55
Surabaya, Indonesia
web: www.elektrim-techtop.com

PT Jayatech Palmindo
Kawasan Industri Medan 2 (Kim 2)
Jalan Pulau Solor No. 18
Medan, Indonesia
web: www.elektrim-techtop.com

PT Biotani Indonesia
Jalan Jenderal Sudirman Bukit Indah Sukajadi
Ruko Dermaga Blok RE-09
Batam, Indonesia
web: www.elektrim-techtop.com

PHILIPPINES

P.T. Cerna Corporation
4173 Ponte Street Barangay
Sta. Cruz Makati City, Philippines
web: www.elektrim-techtop.com

CHINA

Shanghai Top Motor Co. Ltd
No. 303 Kangliu Road
Kangqiao Industrial Zone
Pudong, Shanghai
web: www.techtop.com

HONG KONG

Zenith International Enterprise Ltd.
Unit A2, 21/F, Fortune Factory Building
40 Lee Chung Street
Chiwan, Hong Kong
web: www.techtop.com

MIDDLE EAST

DUBAI

Global Power Engineering Co. Ltd
Showroom No. Ead 01-02-03
Dragon Mart, International City
P.O. Box 299805
Dubai, U.A.E
web: www.halotop.cn

SRI LANKA

Elektrim Techtop Motors Pte Ltd
80 Joo Koon Circle
Singapore 629100
web: www.elektrim-techtop.com

OCEANIA

AUSTRALIA

Techtop Australia Pty Ltd
26 Kingsley Close
Rowville VIC 3178
Australia
web: www.techtop.com.au

In the world

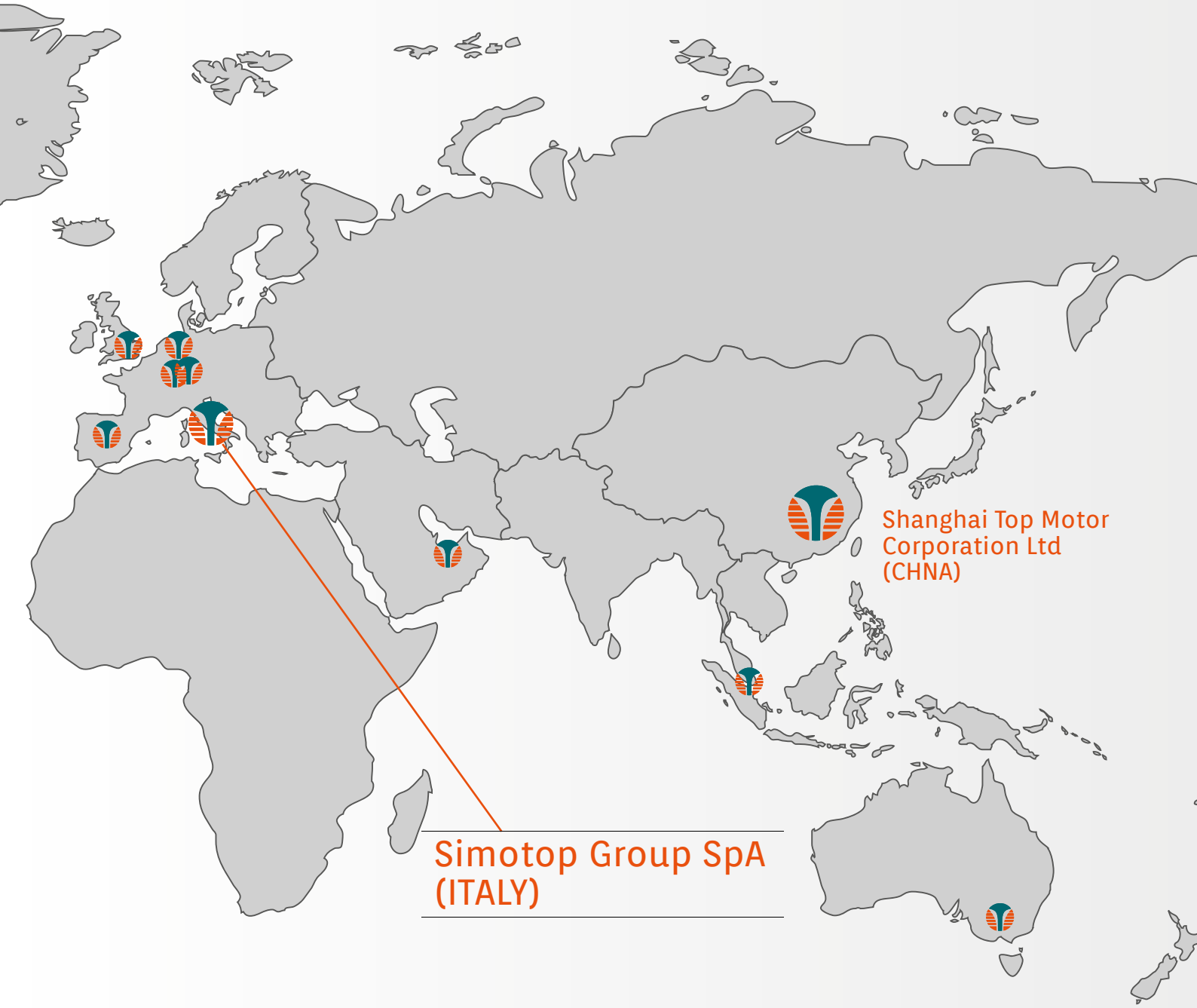
Shanghai Top Motor
Corporation Ltd
(CHNA)
Simotop Group SpA
(ITALY)

Technical, mechanical dimensions and any other data reported in this catalog are not binding, Simotop Group Spa reserves the right to modify all the data reported in this catalog at any time and without notice.

electric motors
SIMOTOP®
GROUP

SIMOTOP GROUP SPA
Via Ca' Bianca 320
40024 Castel San Pietro (BO) - Italy
Tel. +39 051 6951975 - Fax +39 051 941634
www.simotopgroup.com - info@simotopgroup.com